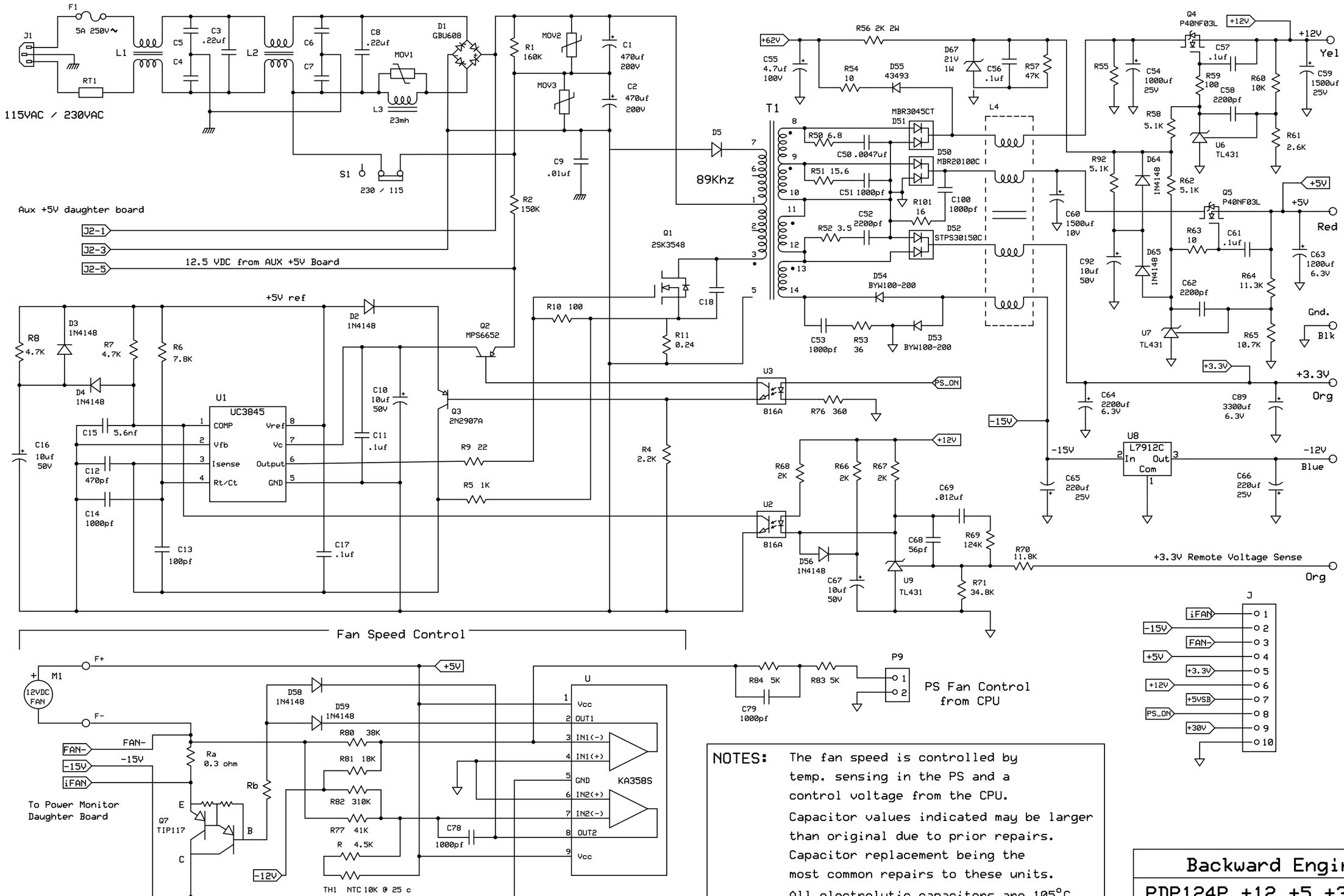

NOTES: The fan speed is controlled by temp. sensing in the PS and a control voltage from the CPU.
Capacitor values indicated may be larger than original due to prior repairs.
Capacitor replacement being the most common repairs to these units.
All electrolytic capacitors are 105°C.

Backward Engineering		
PDP124P +12 +5 +3.3 -12 PS		
Unknown	Rev A 11/28/2014	Page 1 of 3