TITLE	SHEET
COVER SHEET	1
BLOCK DIAGRAM	2
CHANGE LIST	3
PROCESSOR-1(LGA775)	4
PROCESSOR-2(LGA775)	5
NB1-FSB_PCIE X16_DMI	6
NB2-DDR 2 CHANEL A/B	7
NB3-POWER	8
NB4-MISC_GFX	9
NB5-GND	10
SB1-PCI_PCIE_USB_DMI	11
SB2-LPC_SATA_RTC_AUDIO_SP	12
SB3-POWER	13
CLK GEN-RTM876-665	14
DDRII DIMMA1	15
DDRII DIMMB1	16
DDRII TERMINATION	17
PE X16 SLOT	18
PCI 1/ IDE CONNECTOR	19
ATX POWER & BYPASS CAP	20
COM , PS2 , USB, PRN CONN	21
FPY FRONT PAN & USB WOL FANS	22
AUDIO CODEC VT1708B	23
AUDIO CONNECTOR	24
VCC_CORE DC-DC CONVERTER	25
MISC DC-DC CONVERTERS	26
V_SM & V_1P25_CORE POWER	27
SUPER I/O 8721FBX	28
VGA CONNECTOR	29
MH & COUPON	30
LAN CHIP-8102EL/8103EL	31
BOM	32

Model Name : IG31M-M7S
Marketing name : G31M
VER:7.1

CPU :
Intel Core 2 Quad /Core 2 Duo/ Pentium Dual-Core /
Celeron Dual Core /Celeron 4xx

System Chipset :
INTEL G31
INTEL ICH7

On Board Chip :
Clock Gen. -- REALTEK RTM876-665
Audio Codec -- VIA VT1708B
Lan Chip -- REALTEK 8102EL/8103EL
PWM Controller -- UP6219B + NIKO-SEM MOS
Super I/O -- ITE 8721FBX
SPI Flash 4M

Main Memory :
2 Channel DDR II * 2 (Max 4GB)

Expansion Slot :
PCI Express x16 Slot * 1
PCI Slot * 1

Heatsink :
NB: NBHS-G31G
SB: BNP SMALL-L

I/O Pannel :
47-RIOBRACKET-68B

PCB SIZE :
169.99 X 224.97mm
4-layers-1080

HW Engineer:		Date:	
HW Leader1:		Date:	
HW Leader2:		Date:	

◇BIOSTAR'S PROPRIETARY INFORMATION◆

◇Any unauthorized use, reproduction, duplication, or disclosure of this document will be subject to the applicable civil and/or criminal penalties.◆

映泰股份有限公司 BIOSTAR GROUP

Title: COVER SHEET		
Size: Custom	Document Number: IG31M-M7S	Rev: 7.1
Date: Wednesday, September 08, 2010	Sheet 1 of 32	

PDF created with pdfFactory Pro trial version www.pdffactory.com

BLOCK DIAGRAM

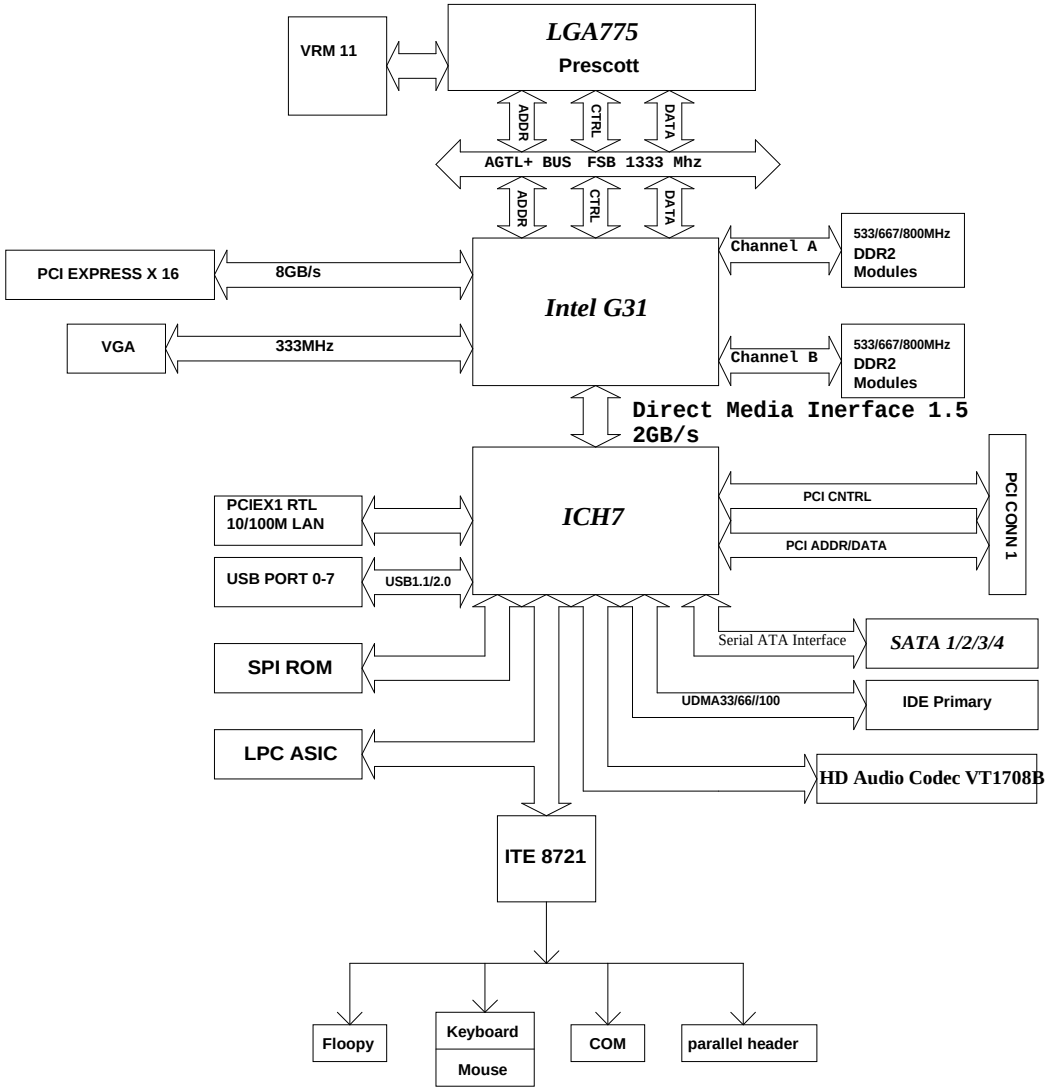

◇BIOSTAR'S PROPRIETARY INFORMATION◆

◇Any unauthorized use, reproduction, duplication, or disclosure of this document will be subject to the applicable civil and/or criminal penalties.◆

映泰股份有限公司
BIOSTAR GROUP

Title	Block Diagram	
Size: Custom	Document Number: IG31M-M7S	Rev: 7.1
Date: Friday, September 03, 2010	Sheet 2 of 32	

PDF created with pdfFactory Pro trial version www.pdffactory.com

(1) 2010/06/07 (V0.7-->V0.71)
V0.71 Changed As Below凵
1.CPU Output Choke change to "INDUCTOR 1UH 30A"乙VIN Cap-->4.7UF乙V_SM Output Add one "1000UF 6.3V 8X12" To Reduce Ripple
2.Add LM431,Ude 2V5_REF as V_FSB_VTT乙V_1P05乙V_1P5_CORE Reference Voltage
3.SIO: Update SLP_S4乙Update VBAT Circuit
4.For PEX16 & DIMM SLOT Too Closed乙Move DIMM SLOTS up to 80mils
5.Update +5V_DUAL Circuit
6.Add V_SM尸V_FSB_VTT OV Function乙Modify V_SM Default Voltage=1.95V乙Use SIO GP65,GP66 as V_FSB_VTT OV
7.Change Component's Reference尸KBMS1,VGA1,RJ45USB1,USB1,F_USB1,F_USB2,PANEL1,PRINT1,ATXPWR1ち
8.NB PLL Delete "SHORT 0805 /NI", Add "1UF 10V Y5V 0402"MLCC
9.Add R353 For "PWRGOOD" Pull High; Add R61 For "CPUSLPJ" Pull High

(2) 2010/08/05 (V0.71-->V7.0)
V7.0 Changed As Below凵
1.Change R239 TO "1.3K 1% 0402" For V_FSB_VTT Default Voltage 1.3V--->1.25V
2.Modify Asynchronous Sideband Signal's Reference Layer in Layout(H_INIT#,NMI,IGNNE#,STPCLK#)
3.Add 3PCS "100P 50V NPO 0402 /NI" Close to Audio Connector For EMI
4.Add CT20 "1000UF 6.3V 8X12" For VCC3_3
5.Add BNC5,BNC6 "10UF 10V 0805 Y5V /NI" For V_FSB_VTT
6.Change C113 "10UF 10V 0805 Y5V" For V_CPU_IO
7.Add C368,C553 For VCC3_3 BYPASS
8.Add R213,R216 For 6321A VBOOT;R210,R211 10 0805-->0 0805

(3) 2010/09/02 (V7.0-->V7.1)
V7.1 Changed As Below凵
1.Page22: Add Q91,Q92 "CM1293 SOT23-6" For Front USB ESD Protection
2.Page27: Change R208,R282 "10 0805"--->"4.7 0805"
3.Page31: Change LAN ESD Q73 CM1293 /NI--->RCLAMP3304 /NI
4.Page25: Change PR31,PR32"0 0402"--->"2.7 0805"
5.Page21: Change RN6,RN10,RN20"22 8P4R 0402"--->"33 8P4R 0402" For Impedance Match
6.Page21: Change C2,C3,C4,C6"33P 50V NPO 0402"--->"47P 50V NPO 0402"
7.Page05: Change C35,C37,C40,C97,C354,C356"0.1UF 16V X7R 0402"--->"0.1UF 16V Y5V 0402"
8.Page06: Change C95,C134"0.1UF 16V X7R 0402"--->"0.1UF 16V Y5V 0402"
9.Page09: Change C363"0.1UF 16V X7R 0402"--->"0.1UF 16V Y5V 0402" For Cost down
10.Page27: Change R326,R373 "10K 1% 0402"--->"10K 0402" For Cost Down

◇BIOSTAR'S PROPRIETARY INFORMATION◆

◇Any unauthorized use, reproduction, duplication, or disclosure of this document will be subject to the applicable civil and/or criminal penalties.◆

映泰股份有限公司
BIOSTAR GROUP

Title	Change List	
Size: Custom	Document Number: IG31M-M7S	Rev: 7.1
Date: Wednesday, September 08, 2010	Sheet 3 of 32	

PDF created with pdfFactory Pro trial version www.pdffactory.com

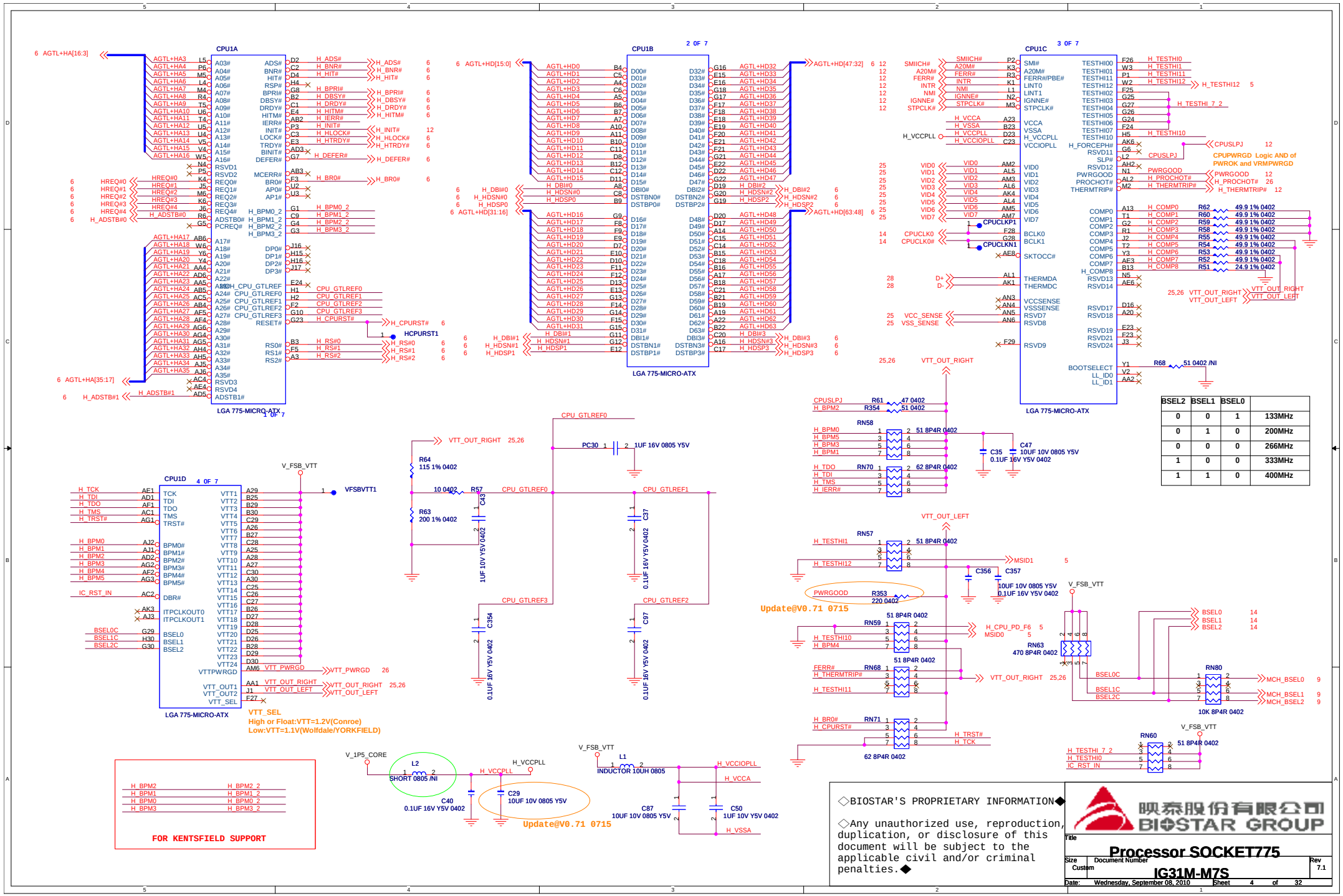

PDF created with pdfFactory Pro trial version www.pdffactory.com

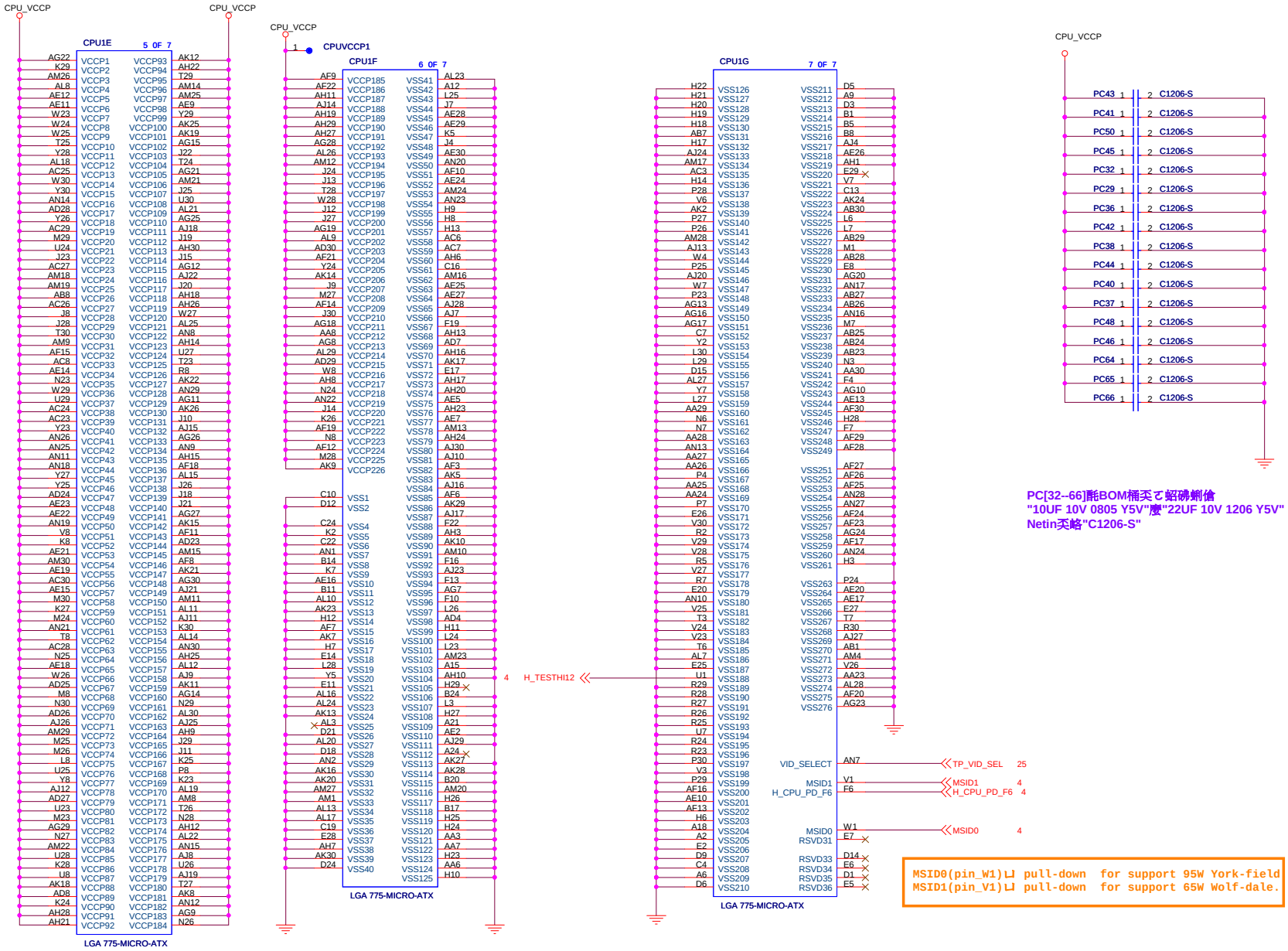

◇BIOSTAR'S PROPRIETARY INFORMATION◆

◇Any unauthorized use, reproduction, duplication, or disclosure of this document will be subject to the applicable civil and/or criminal penalties.◆

映泰股份有限公司
BIOSTAR GROUP

Title: Processor SOCKET 775

Size	Document Number	Rev
Custom	IG31M-M7S	7.1

Date: Wednesday, September 08, 2010 Sheet 5 of 32

PDF created with pdfFactory Pro trial version www.pdffactory.com

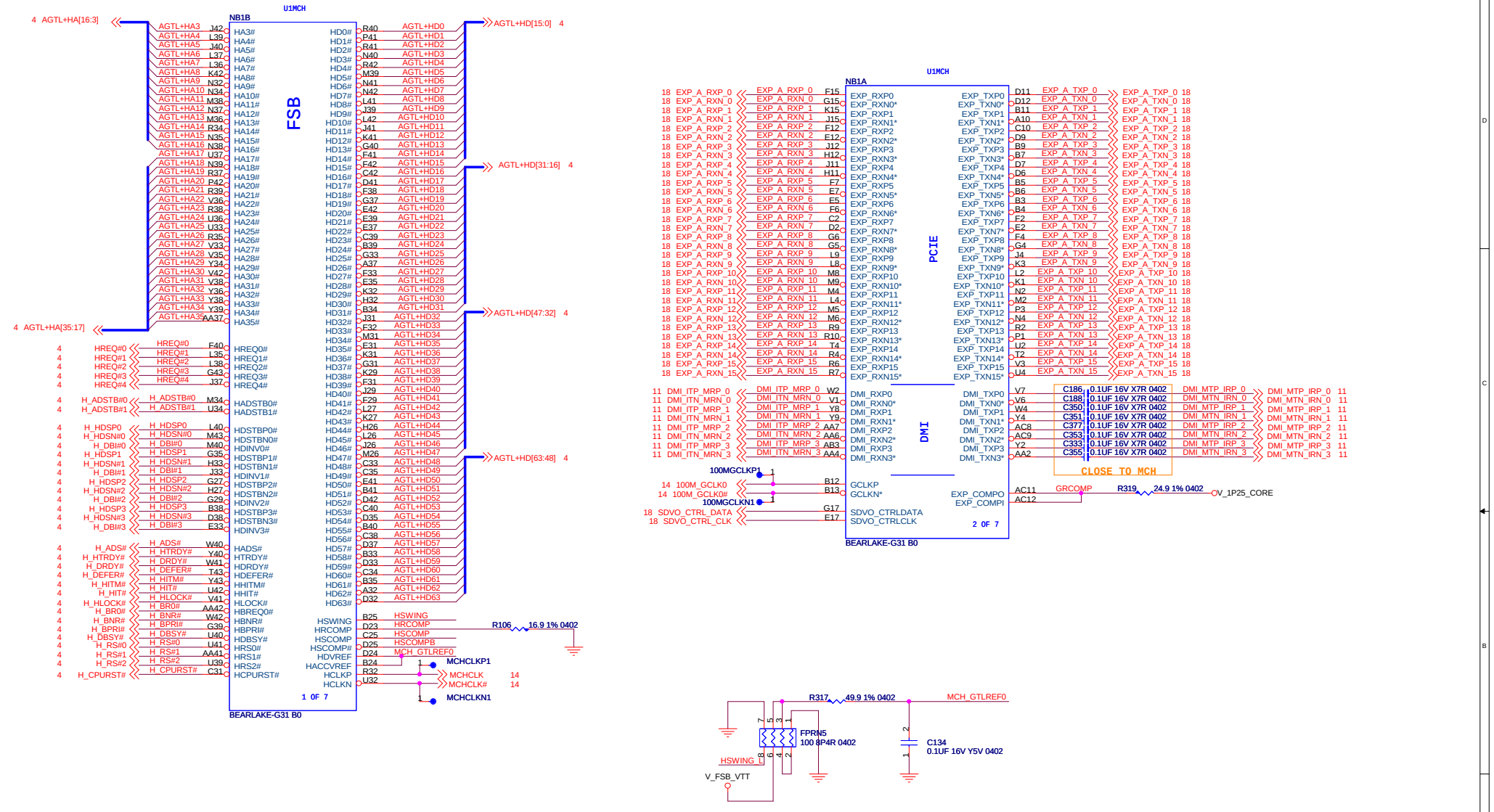

◇BIOSTAR'S PROPRIETARY INFORMATION◆

◇Any unauthorized use, reproduction, duplication, or disclosure of this document will be subject to the applicable civil and/or criminal penalties.◆

映泰股份有限公司 BIOSTAR GROUP

Title: North Bridge

Size	Document Number	Rev
Custom	IG31M-M7S	7.1

Date: Wednesday, September 08, 2010 Sheet 6 of 32

PDF created with pdfFactory Pro trial version www.pdffactory.com

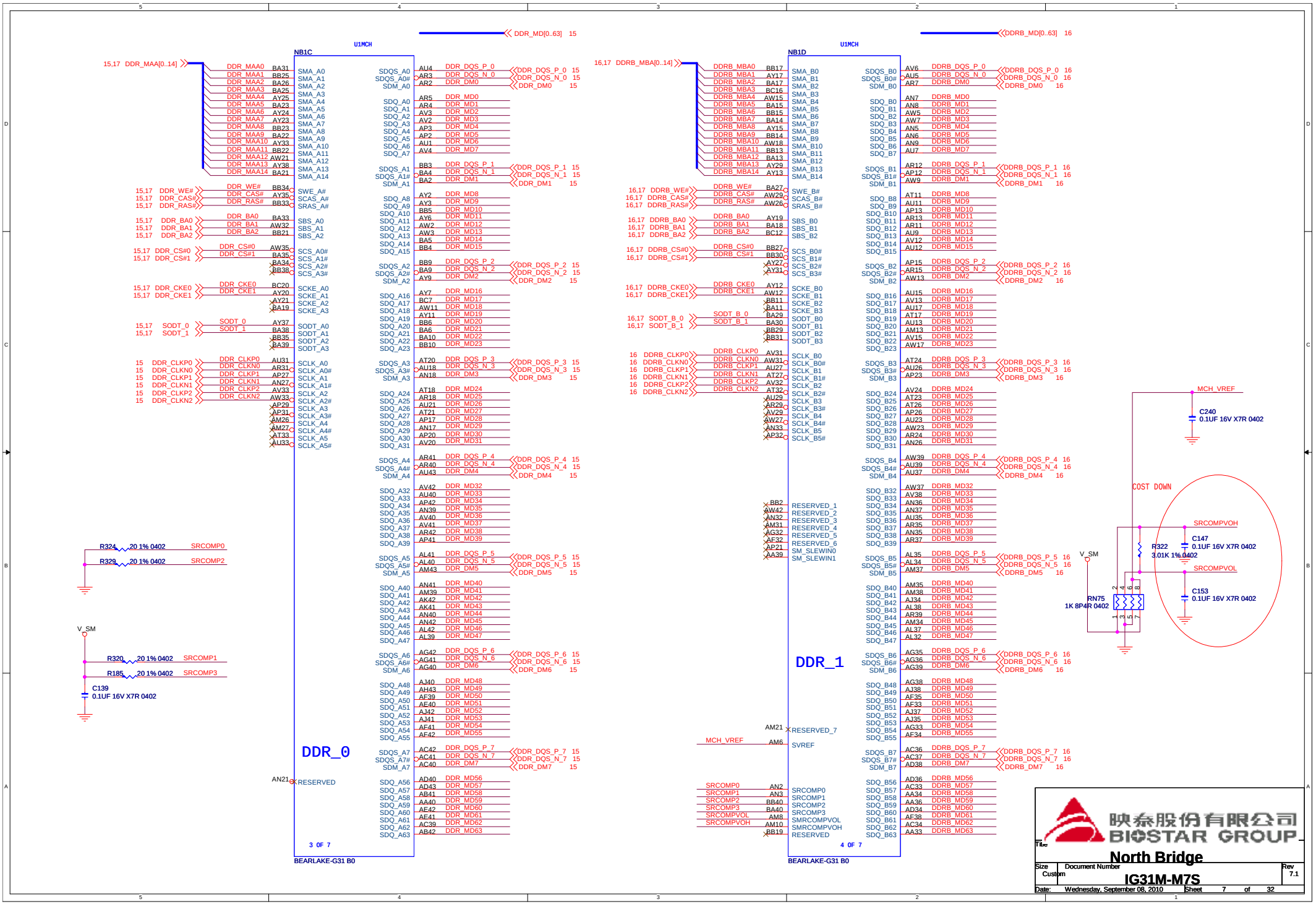

PDF created with pdfFactory Pro trial version www.pdffactory.com

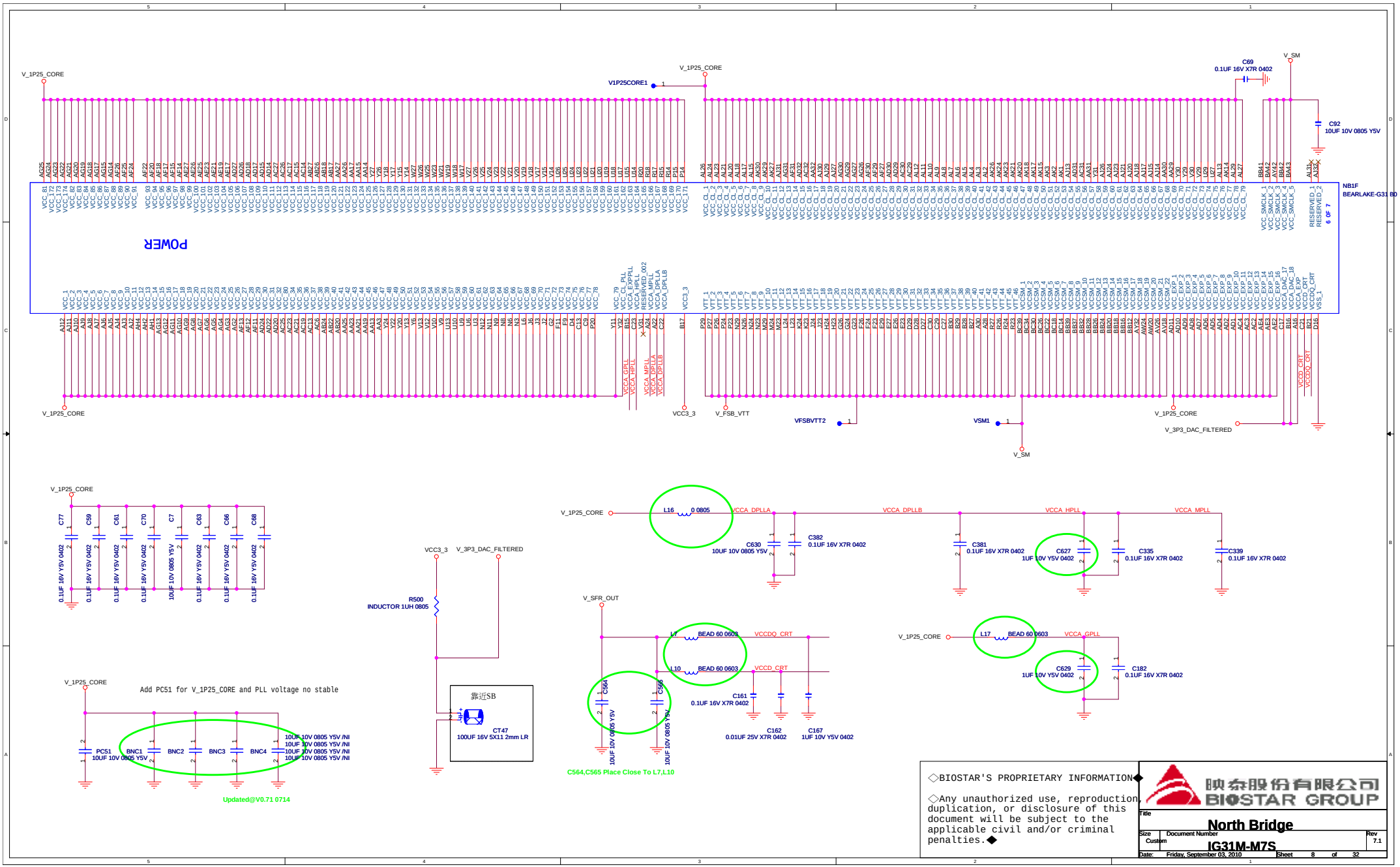

PDF created with pdfFactory Pro trial version www.pdffactory.com

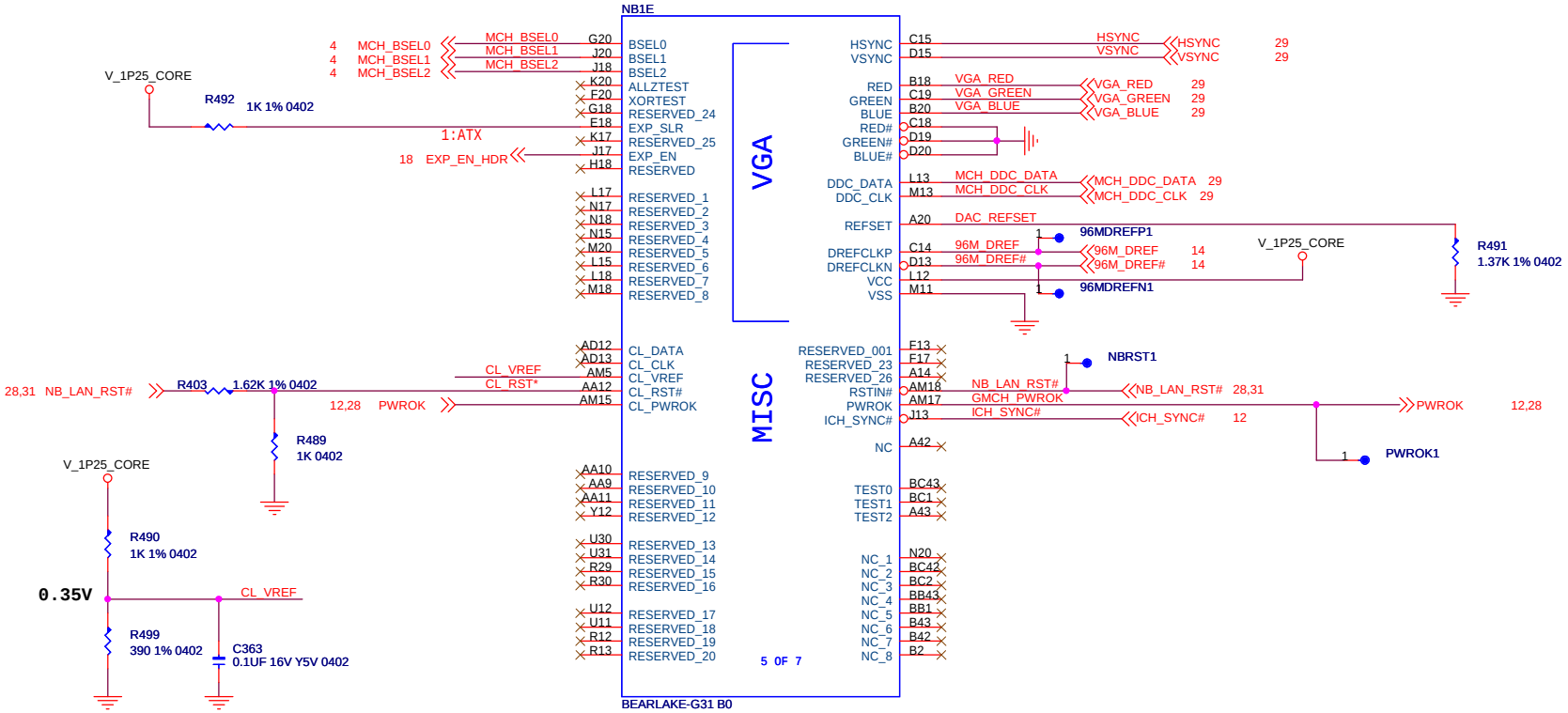

BSEL TABLE

III	II	I	PSB FREQUENCY
0	0	0	266 MHZ (1066)
0	0	1	133 MHZ (533)
0	1	0	200 MHZ (800)
1	0	0	333 MHZ (1333)

◇BIOSTAR'S PROPRIETARY INFORMATION◆

◇Any unauthorized use, reproduction, duplication, or disclosure of this document will be subject to the applicable civil and/or criminal penalties.◆

映泰股份有限公司 BIOSTAR GROUP

Title: NB(4)

Size: Custom | Document Number: IG31M-M7S | Rev: 7.1

Date: Wednesday, September 08, 2010 | Sheet 9 of 32

PDF created with pdfFactory Pro trial version www.pdffactory.com

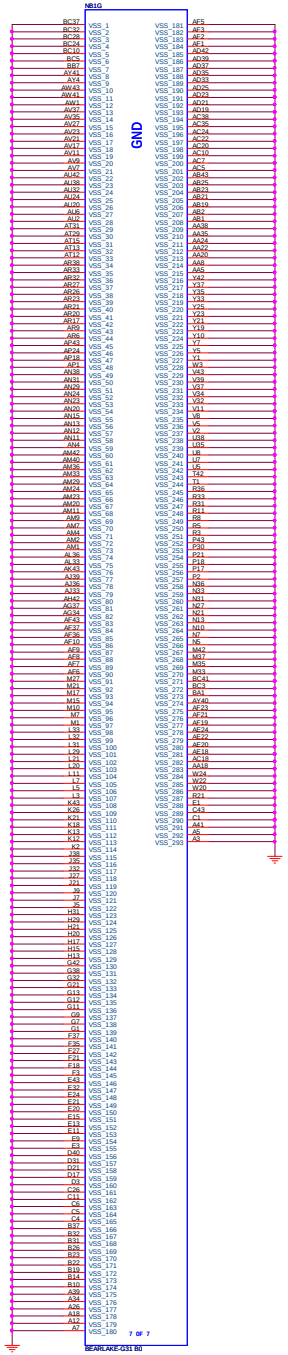

◇BIOSTAR'S PROPRIETARY INFORMATION◆

◇Any unauthorized use, reproduction, duplication, or disclosure of this document will be subject to the applicable civil and/or criminal penalties.◆

映泰股份有限公司
BIOSTAR GROUP

File	NB(5)	
Size	Document Number	Rev
Custom	IG31M-M7S	7.1
Date: Friday, September 03, 2010	Sheet 30 of 32	

PDF created with pdfFactory Pro trial version www.pdffactory.com

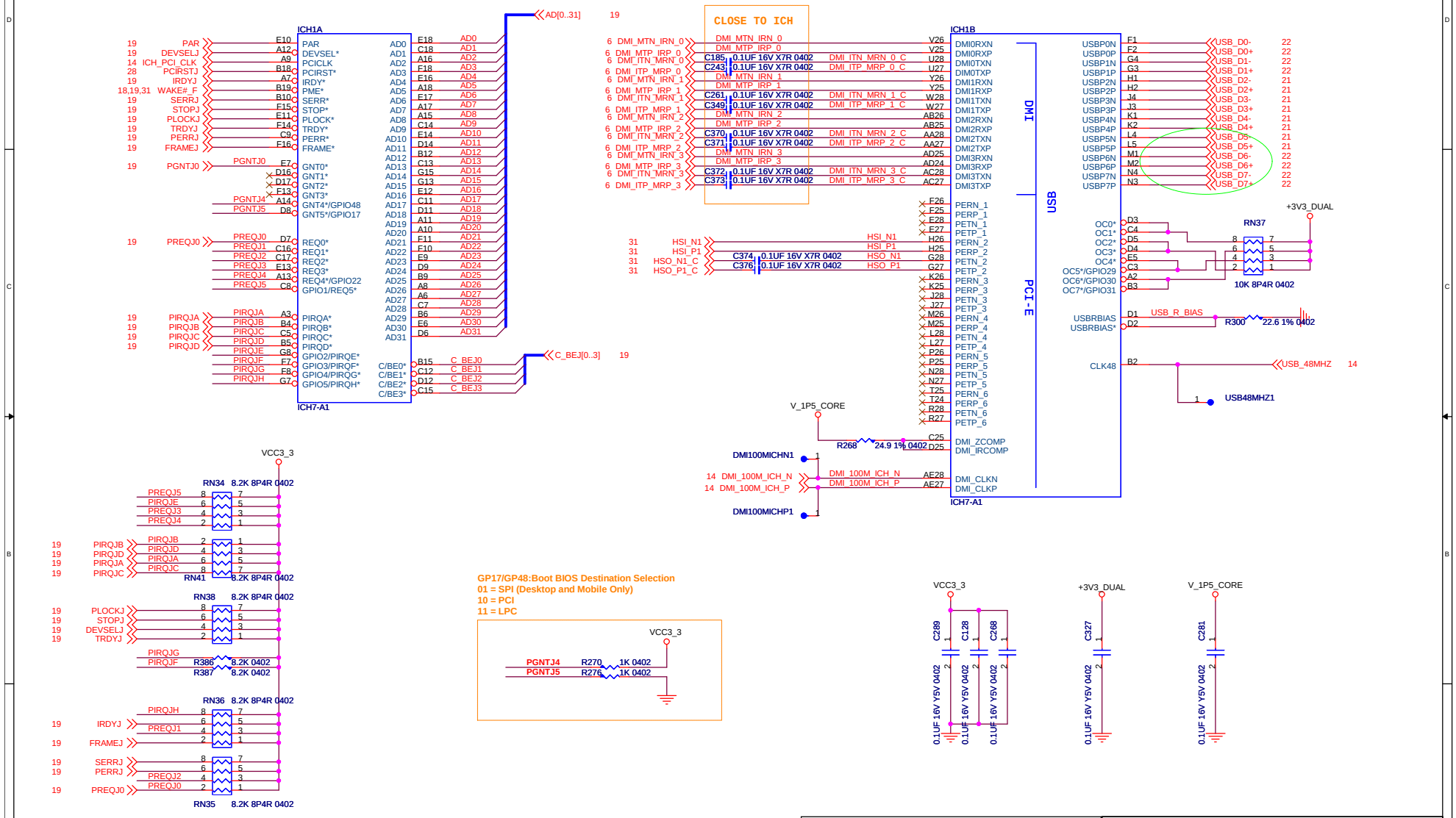

◇BIOSTAR'S PROPRIETARY INFORMATION◆

◇Any unauthorized use, reproduction, duplication, or disclosure of this document will be subject to the applicable civil and/or criminal penalties.◆

映泰股份有限公司 BIOSTAR GROUP

Title: South Bridge

Size: Custom | Document Number: IG31M-M7S | Rev: 7.1

Date: Wednesday, September 08, 2010 | Sheet 11 of 32

PDF created with pdfFactory Pro trial version www.pdffactory.com

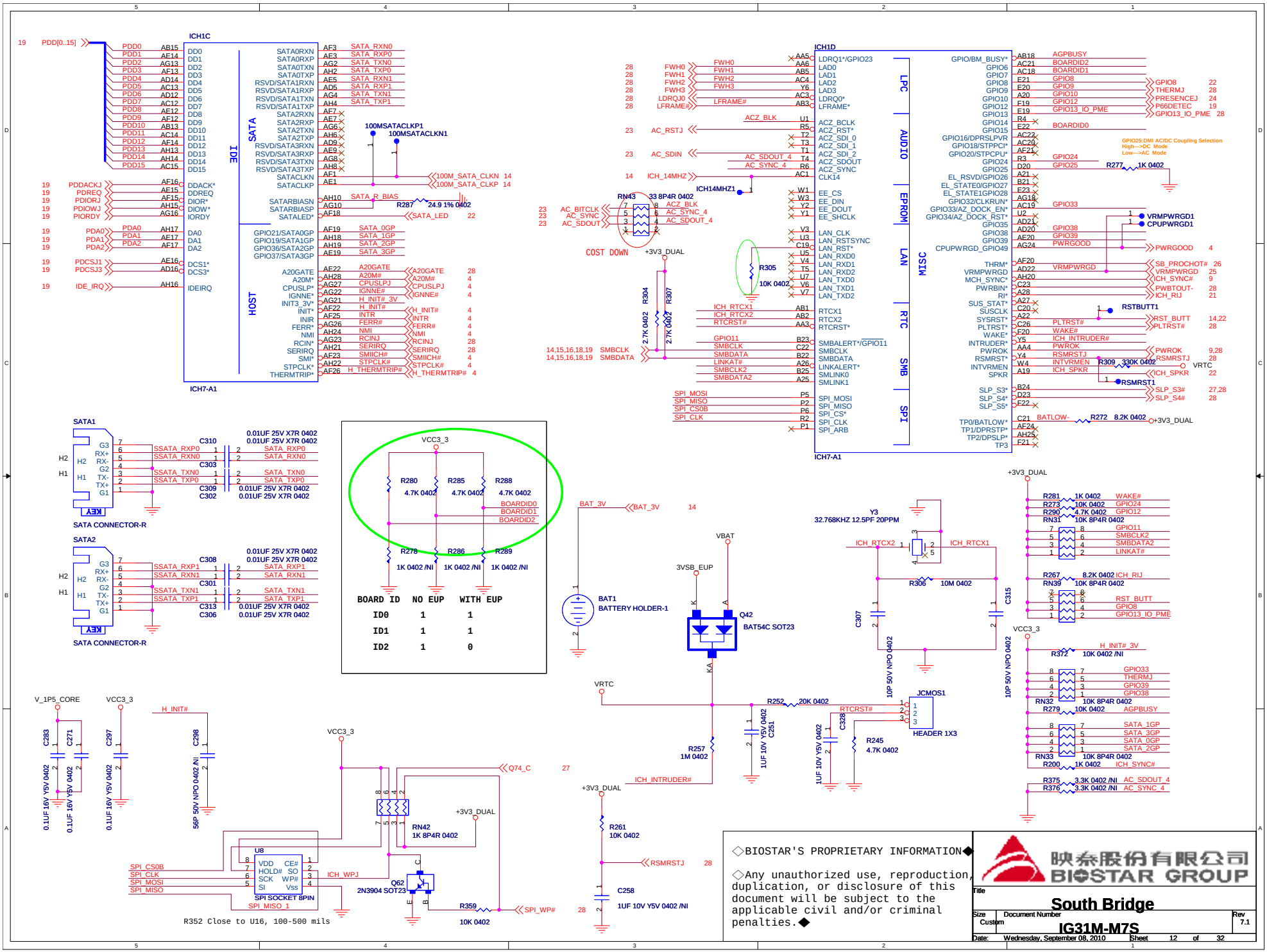

PDF created with pdfFactory Pro trial version www.pdffactory.com

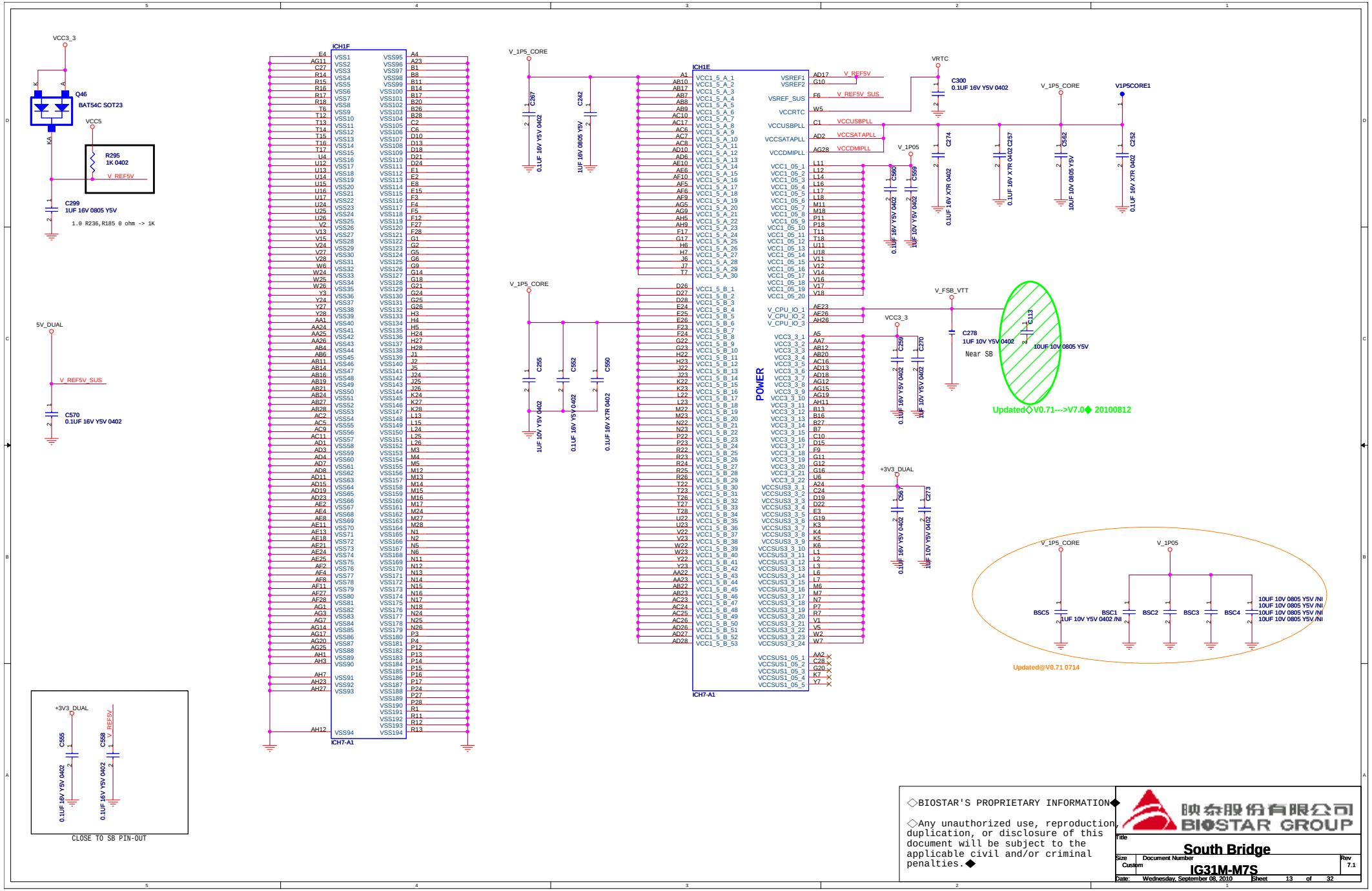

◇BIOSTAR'S PROPRIETARY INFORMATION◆

◇Any unauthorized use, reproduction, duplication, or disclosure of this document will be subject to the applicable civil and/or criminal penalties.◆

映泰股份有限公司
BIOSTAR GROUP

Title: South Bridge

Size: Custom | Document Number: IG31M-M7S | Rev: 7.1

Date: Wednesday, September 08, 2010 | Sheet 13 of 32

PDF created with pdfFactory Pro trial version www.pdffactory.com

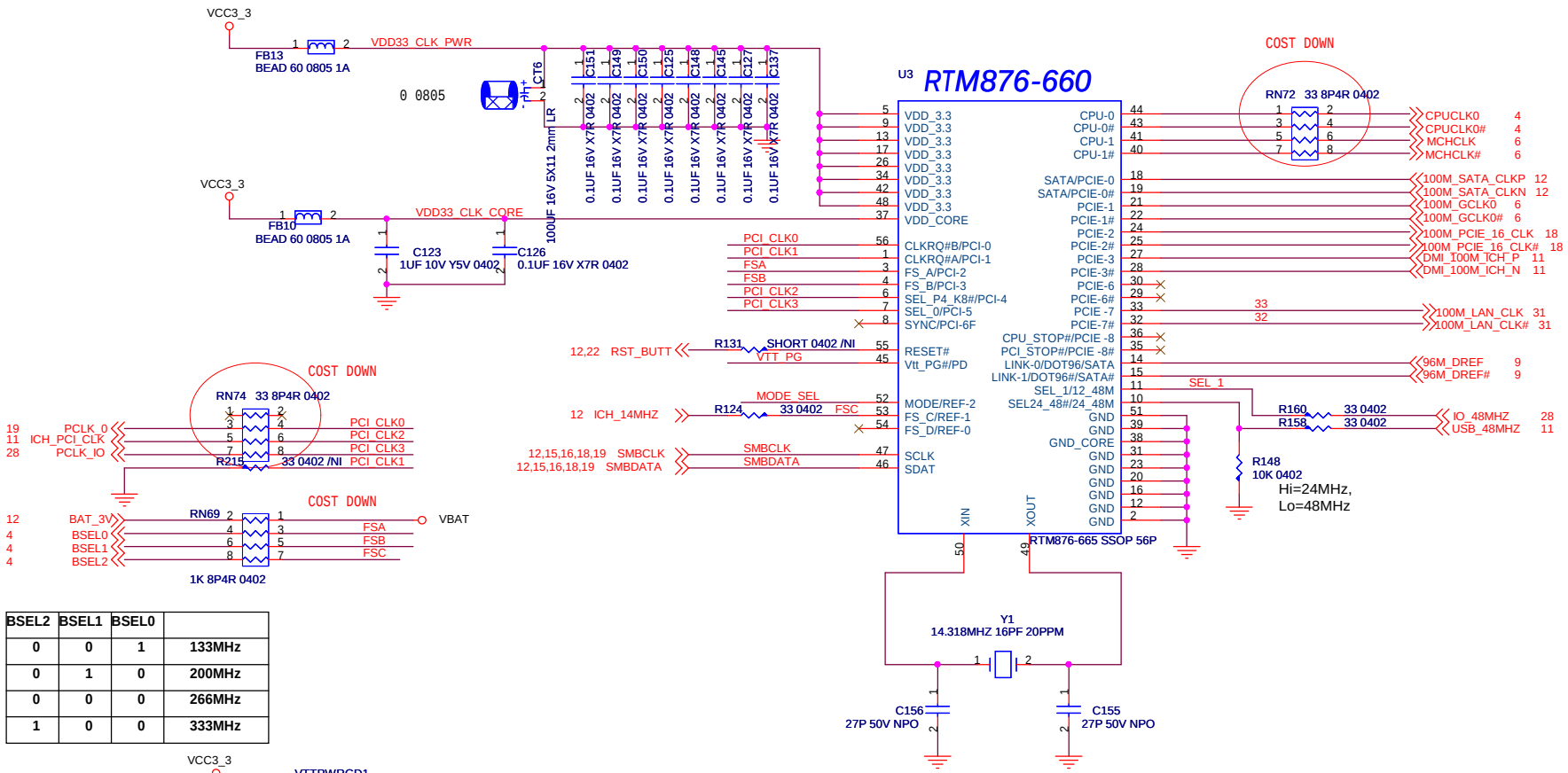

BSEL2	BSEL1	BSEL0	
0	0	1	133MHz
0	1	0	200MHz
0	0	0	266MHz
1	0	0	333MHz

PIN6 PCIF_CLK1=SEL P4/K8(internal pull high)
Hi = P4 0.8V push-pull CPU clock
Lo = K8 3.3V push-pull CPU clock

PIN52 MOD_SEL=SEL PIN35/36=PCIE-8(internal pull low)
MODE=0 PIN33/34 is PCIE8#/PCIE8
MODE=1 PIN33/34 is PCI_STOP#/CPU_STOP#

Pin11 Sel-1	Pin7 Sel-0	Pin7/8 Link/DOT/SATA	Pin11/12 SATA/PCIE	12-48M	Chipset
0	0	Link	SATA	12M	Sis
0	1	DOT	SATA	48M	Intel W/GFX
1	0	Link	PCIEX	48M	VIA
1	1	SATA	PCIEX	48M	Intel

For Intel Chipset w/o GFX (SEL-1/0 = 11)
DOT96 is not necessary

◇BIOSTAR'S PROPRIETARY INFORMATION◆

◇Any unauthorized use, reproduction, duplication, or disclosure of this document will be subject to the applicable civil and/or criminal penalties.◆

映泰股份有限公司
BIOSTAR GROUP

Title: CLK GEN / BIOS (FWH)

Size: Custom | Document Number: IG31M-M7S | Rev: 7.1

Date: Wednesday, September 08, 2010 | Sheet 14 of 32

PDF created with pdfFactory Pro trial version www.pdffactory.com

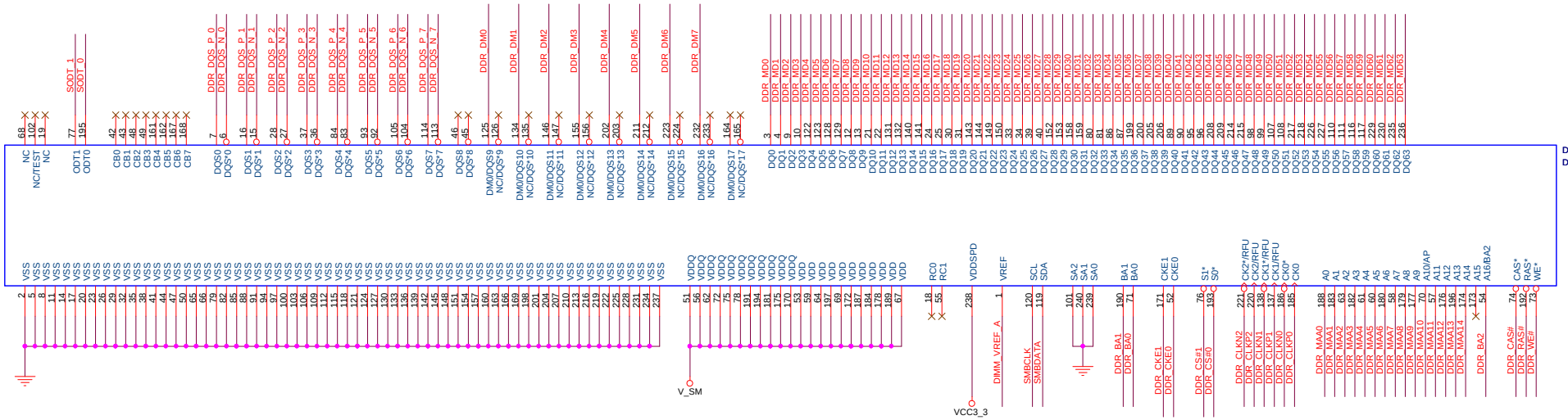

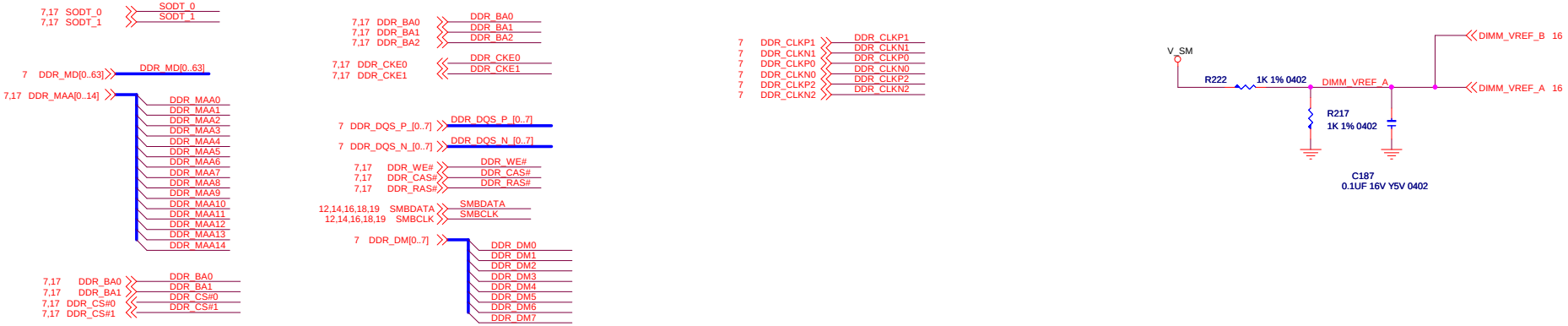

◇BIOSTAR'S PROPRIETARY INFORMATION◆

◇Any unauthorized use, reproduction, duplication, or disclosure of this document will be subject to the applicable civil and/or criminal penalties.◆

映泰股份有限公司
BIOSTAR GROUP

Title: DDR Channel A

Size: Custom | Document Number: IG31M-M7S | Rev: 7.1

Date: Wednesday, September 08, 2010 | Sheet 15 of 32

PDF created with pdfFactory Pro trial version www.pdffactory.com

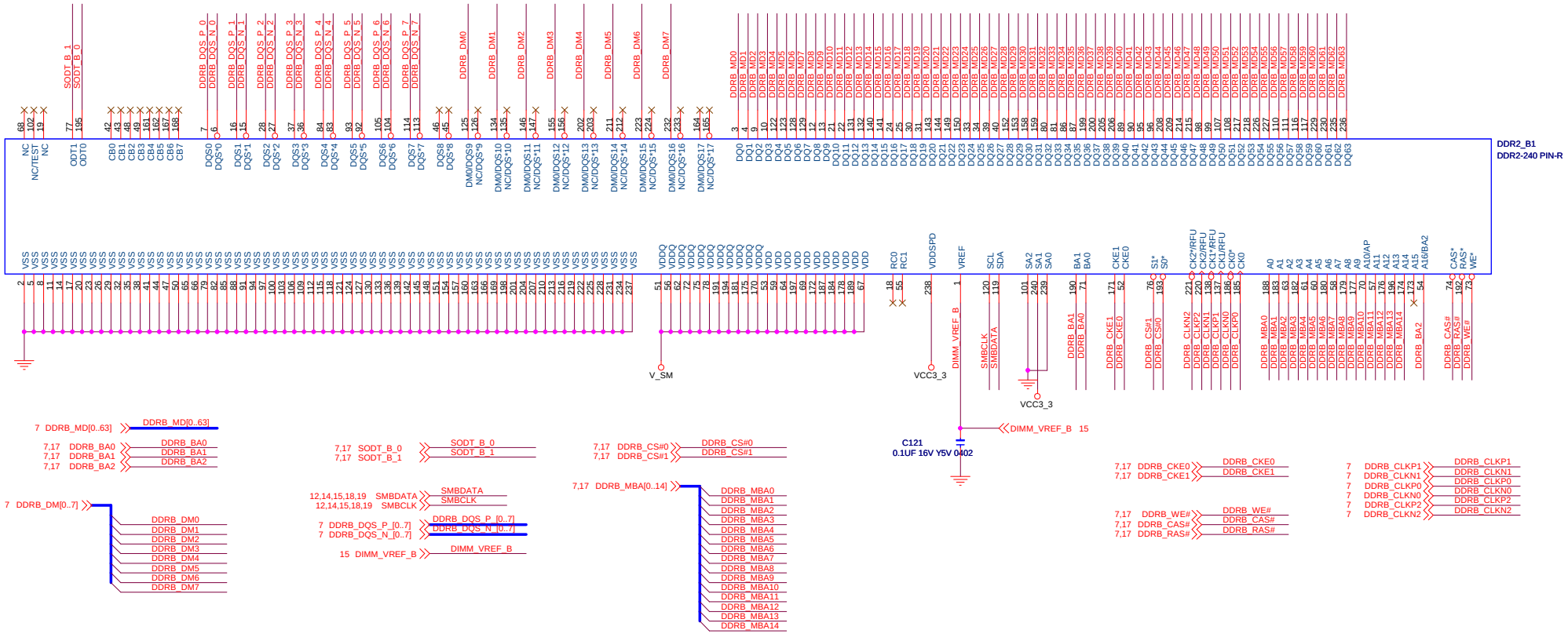

◇BIOSTAR'S PROPRIETARY INFORMATION◆

◇Any unauthorized use, reproduction, duplication, or disclosure of this document will be subject to the applicable civil and/or criminal penalties.◆

映泰股份有限公司
BIOSTAR GROUP

Title: DDR Channel B

Size: Custom | Document Number: IG31M-M7S | Rev: 7.1

Date: Wednesday, September 08, 2010 | Sheet 16 of 32

PDF created with pdfFactory Pro trial version www.pdffactory.com

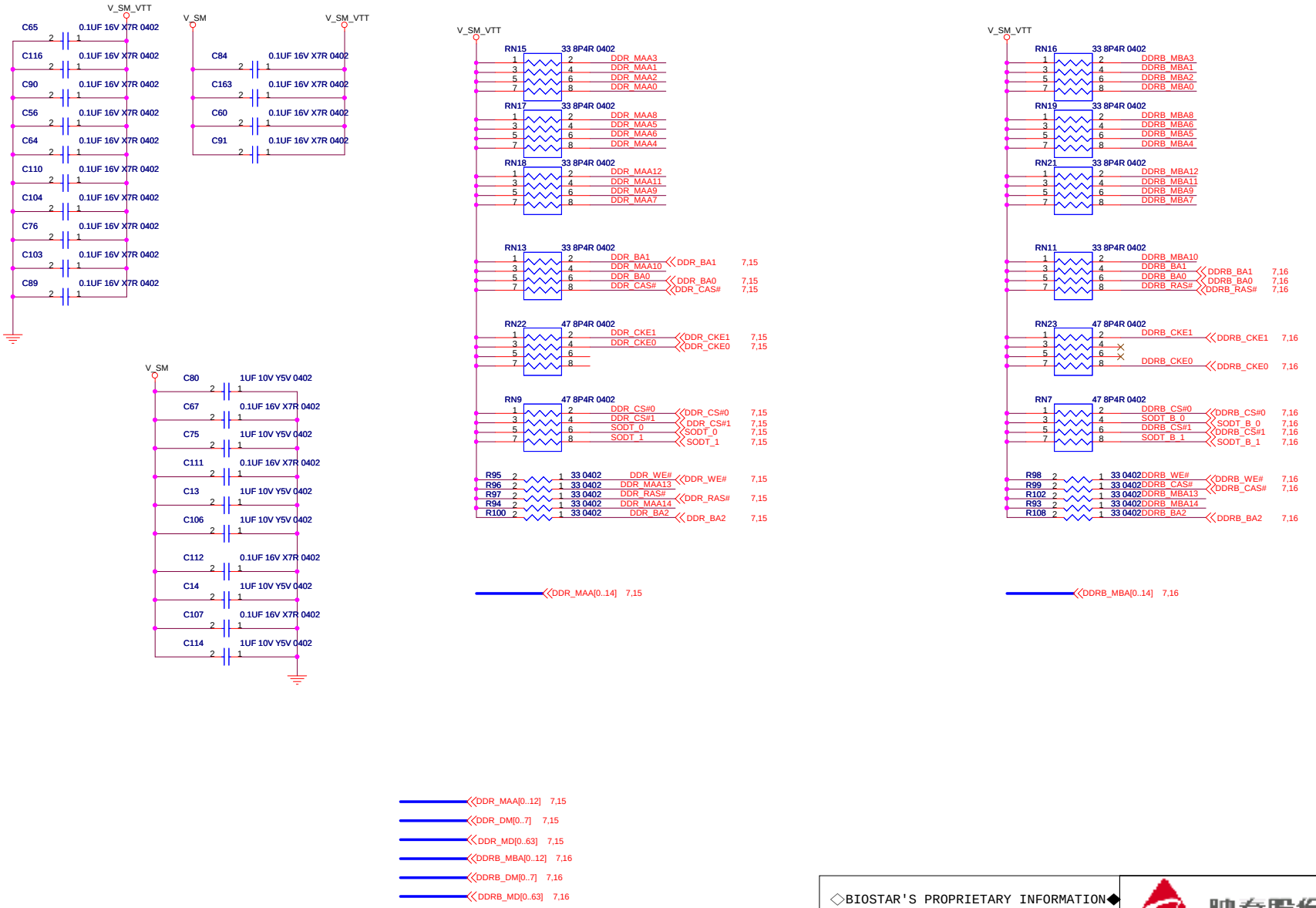

◇BIOSTAR'S PROPRIETARY INFORMATION◆

◇Any unauthorized use, reproduction, duplication, or disclosure of this document will be subject to the applicable civil and/or criminal penalties.◆

映泰股份有限公司
BIOSTAR GROUP

Title: DDR TERMINATION& SERIAL_R

Size: Custom | Document Number: IG31M-M7S | Rev: 7.1

Date: Wednesday, September 08, 2010 | Sheet 17 of 32

PDF created with pdfFactory Pro trial version www.pdffactory.com

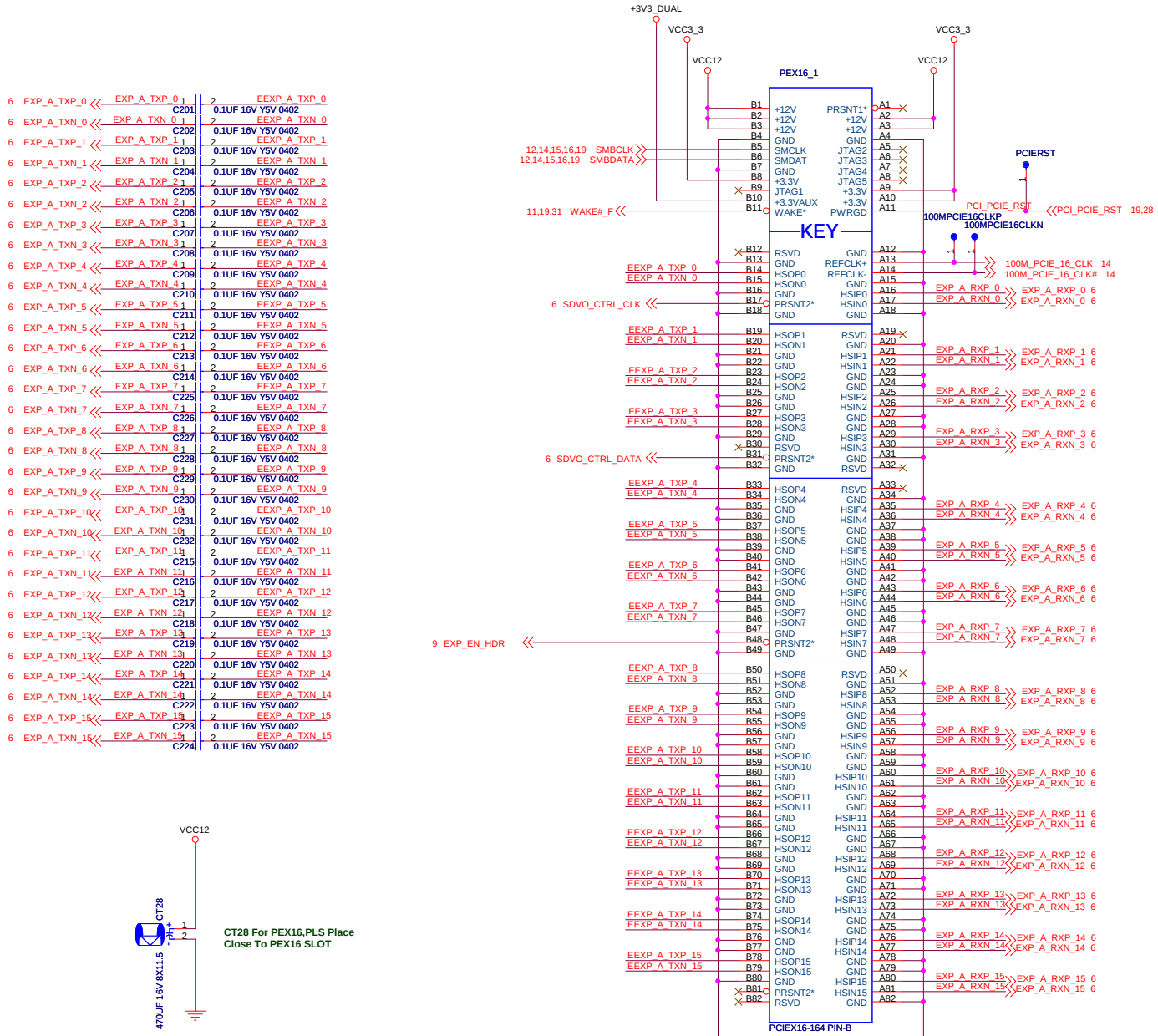

◇BIOSTAR'S PROPRIETARY INFORMATION◆

◇Any unauthorized use, reproduction, duplication, or disclosure of this document will be subject to the applicable civil and/or criminal penalties.◆

映泰股份有限公司 BIOSTAR GROUP

Title: PCI EXPRESS X16

Size: Custom | Document Number: IG31M-M7S | Rev: 7.1

Date: Wednesday, September 08, 2010 | Sheet 18 of 32

PDF created with pdfFactory Pro trial version www.pdffactory.com

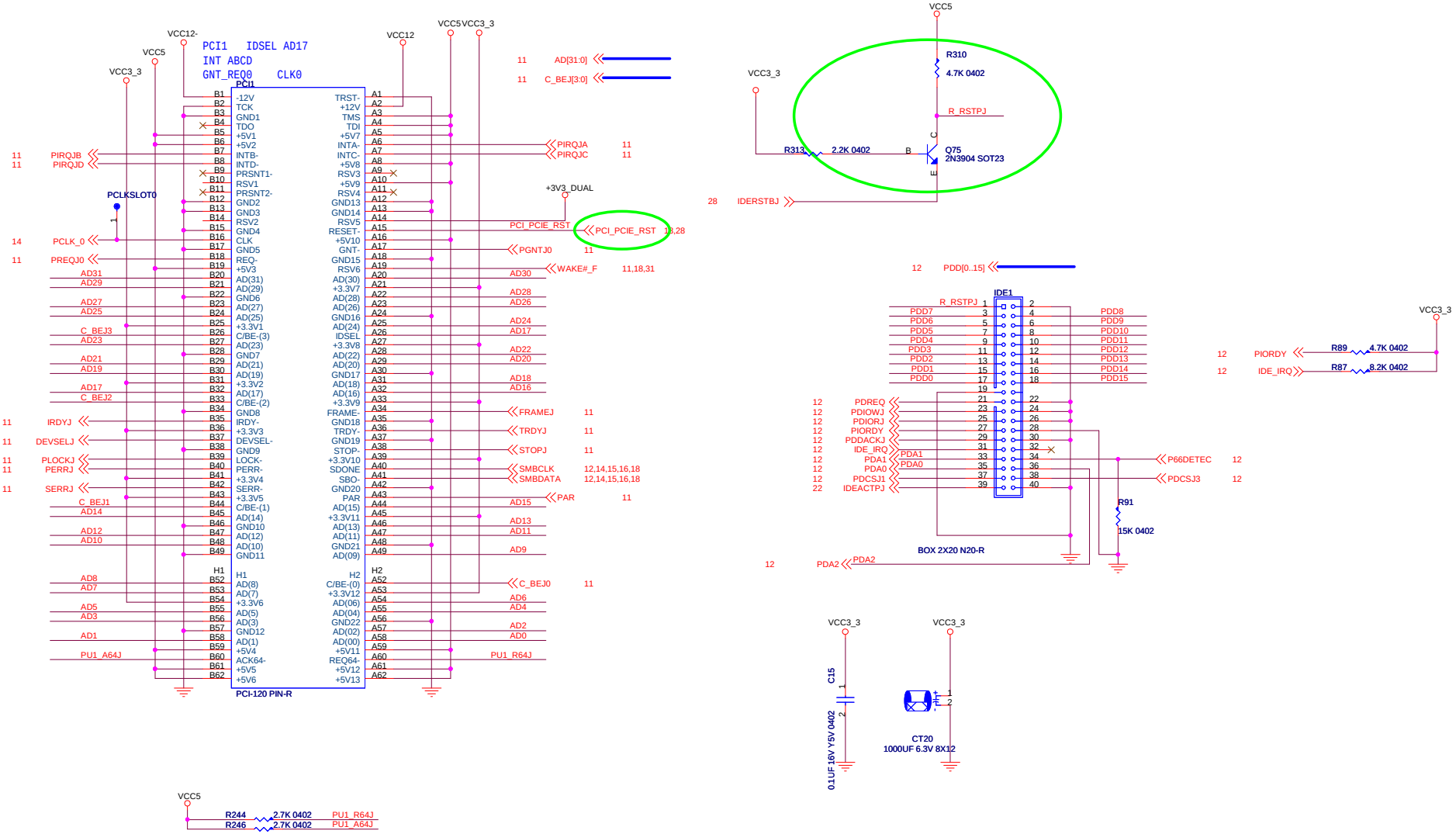

◇BIOSTAR'S PROPRIETARY INFORMATION◆

◇Any unauthorized use, reproduction, duplication, or disclosure of this document will be subject to the applicable civil and/or criminal penalties.◆

映泰股份有限公司
BIOSTAR GROUP

Title: **PCI CONNECTOR**

Size: Custom | Document Number: IG31M-M7S | Rev: 7.1

Date: Wednesday, September 08, 2010 | Sheet 19 of 32

PDF created with pdfFactory Pro trial version www.pdffactory.com

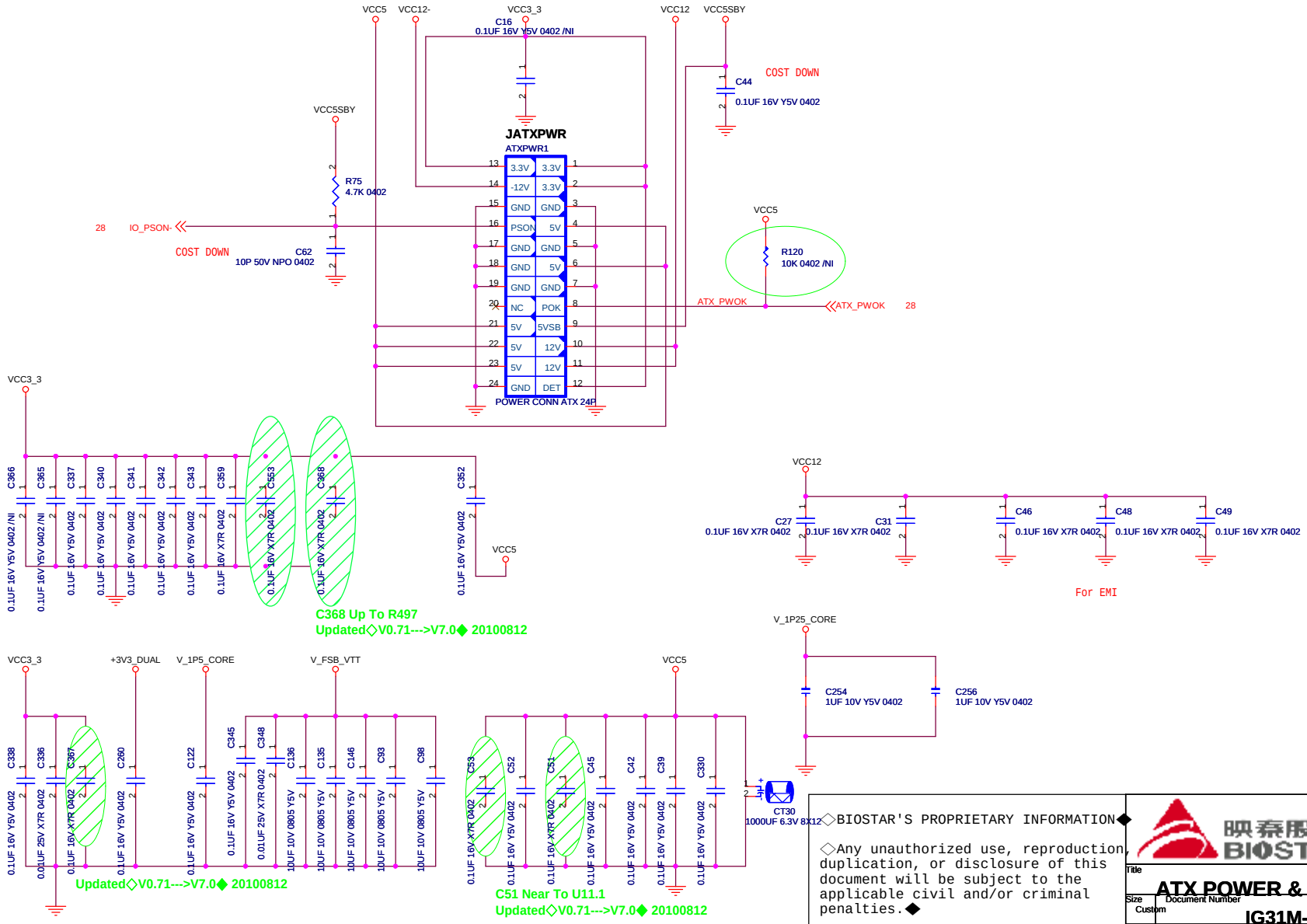

◇BIOSTAR'S PROPRIETARY INFORMATION◆

◇Any unauthorized use, reproduction, duplication, or disclosure of this document will be subject to the applicable civil and/or criminal penalties.◆

映泰股份有限公司 BIOSTAR GROUP

Title: ATX POWER & Bypass CAP

Size: Custom | Document Number: IG31M-M7S | Rev: 7.1

Date: Wednesday, September 08, 2010 | Sheet 20 of 32

PDF created with pdfFactory Pro trial version www.pdffactory.com

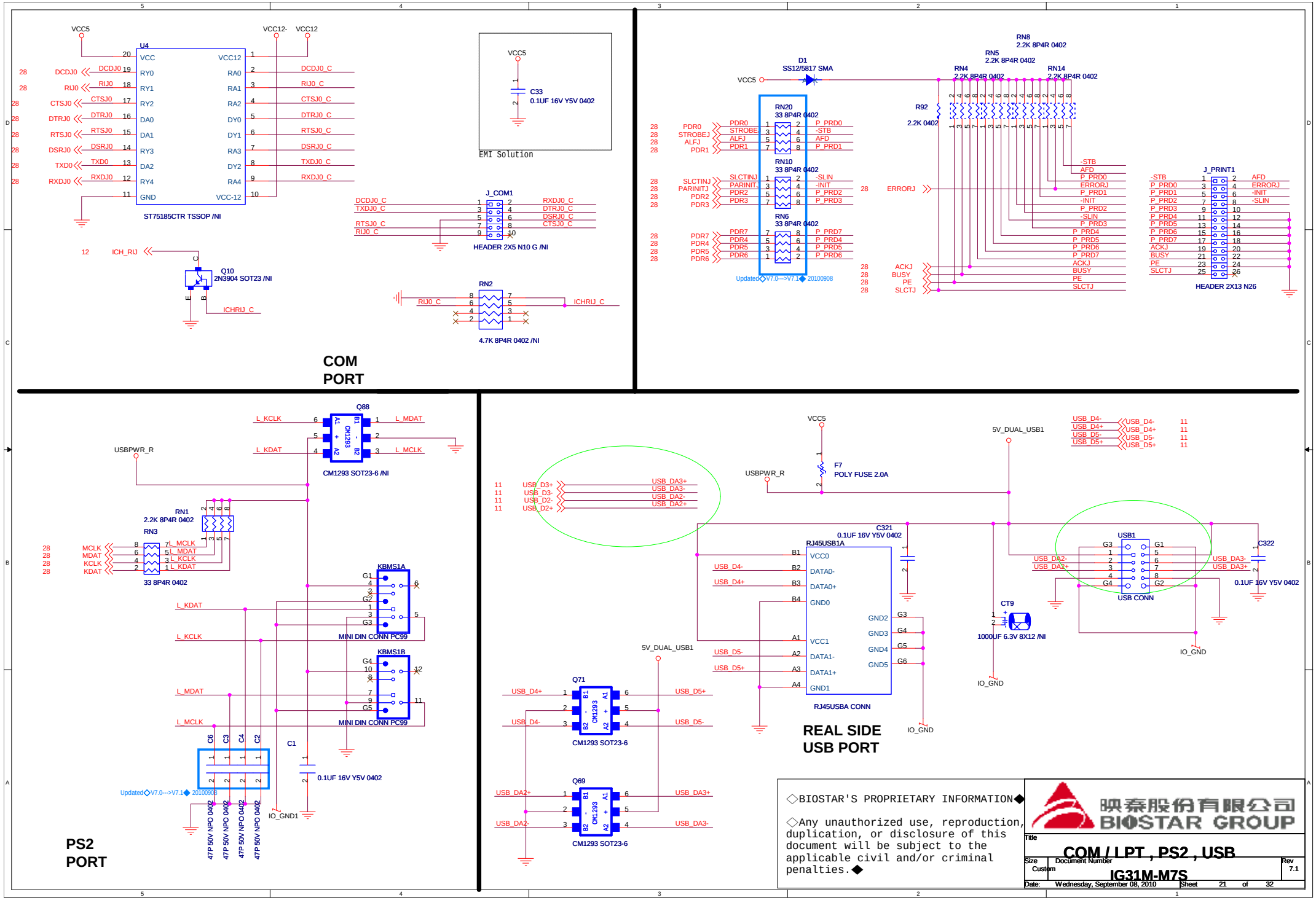

PDF created with pdfFactory Pro trial version www.pdffactory.com

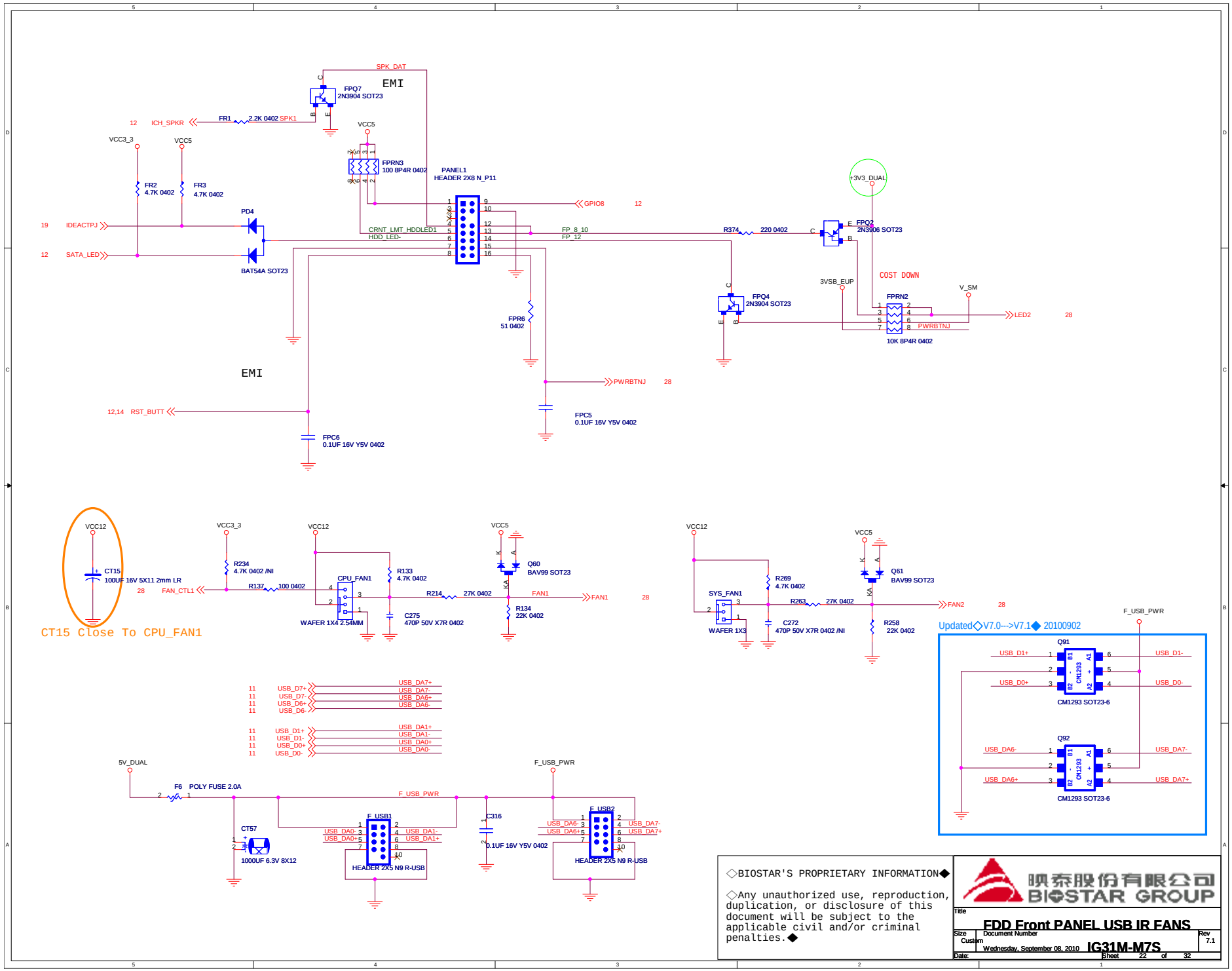

◇BIOSTAR'S PROPRIETARY INFORMATION◆

◇Any unauthorized use, reproduction, duplication, or disclosure of this document will be subject to the applicable civil and/or criminal penalties.◆

映泰股份有限公司 BIOSTAR GROUP

Title: FDD Front PANEL USB IR FANS

Size: Custom | Document Number: IG31M-M7S | Rev: 7.1

Date: Wednesday, September 08, 2010 | Sheet 22 of 32

PDF created with pdfFactory Pro trial version www.pdffactory.com

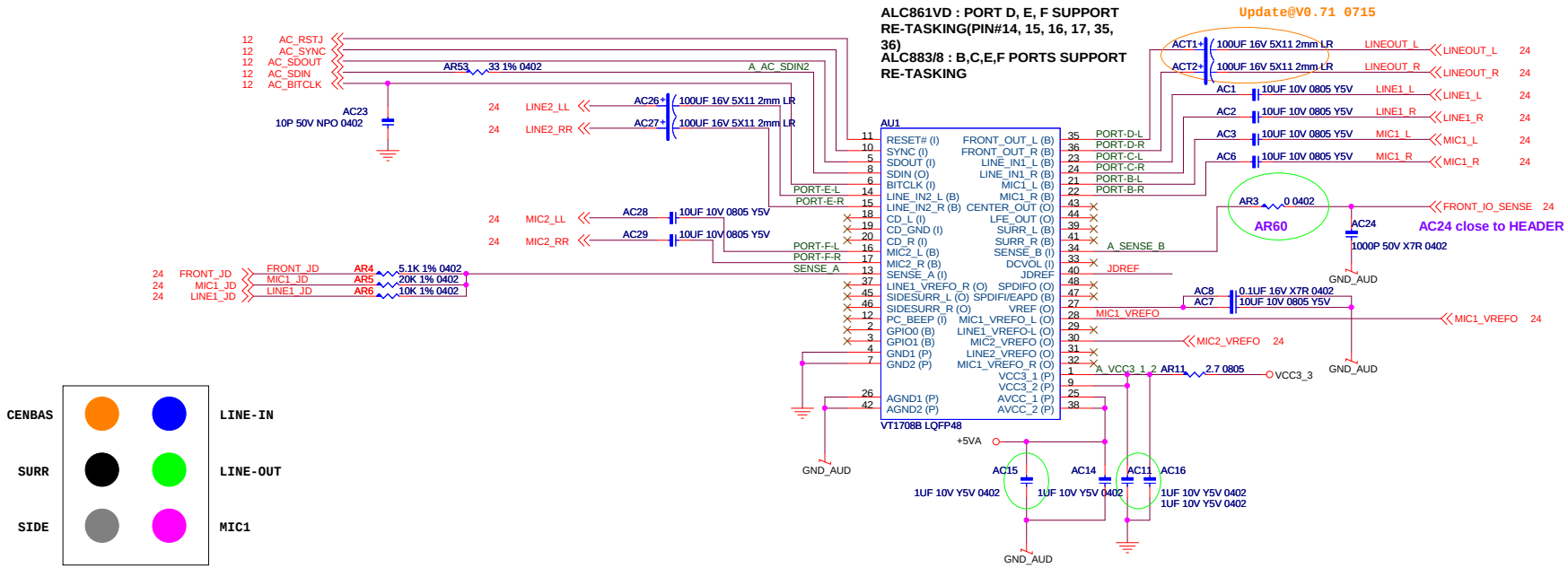

7.1 Speaker Configuration

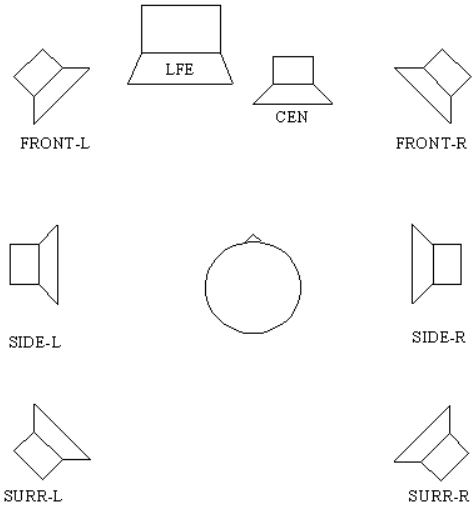

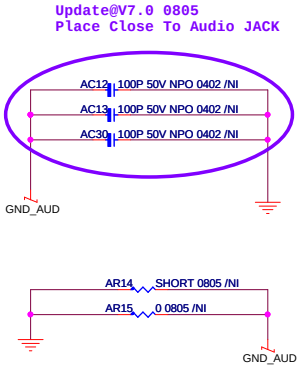

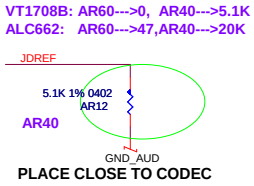

Configuration

	PORT-A	PORT-B	PORT-C	PORT-D	PORT-E	PORT-F	PORT-G	PORT-H
Function	SURR	MIC1	LINE1	LINEOUT	LINE2	MIC2	CEN/LFE	SIDE
Location	Rear	Rear	Rear	Rear	Front	Front	Rear	Rear

◇BIOSTAR'S PROPRIETARY INFORMATION◆

◇Any unauthorized use, reproduction, duplication, or disclosure of this document will be subject to the applicable civil and/or criminal penalties.◆

映泰股份有限公司 BIOSTAR GROUP

Title: VT1708B

Size: Custom | Document Number: IG31M-M7S | Rev: 7.1

Date: Wednesday, September 08, 2010 | Sheet 23 of 32

PDF created with pdfFactory Pro trial version www.pdffactory.com

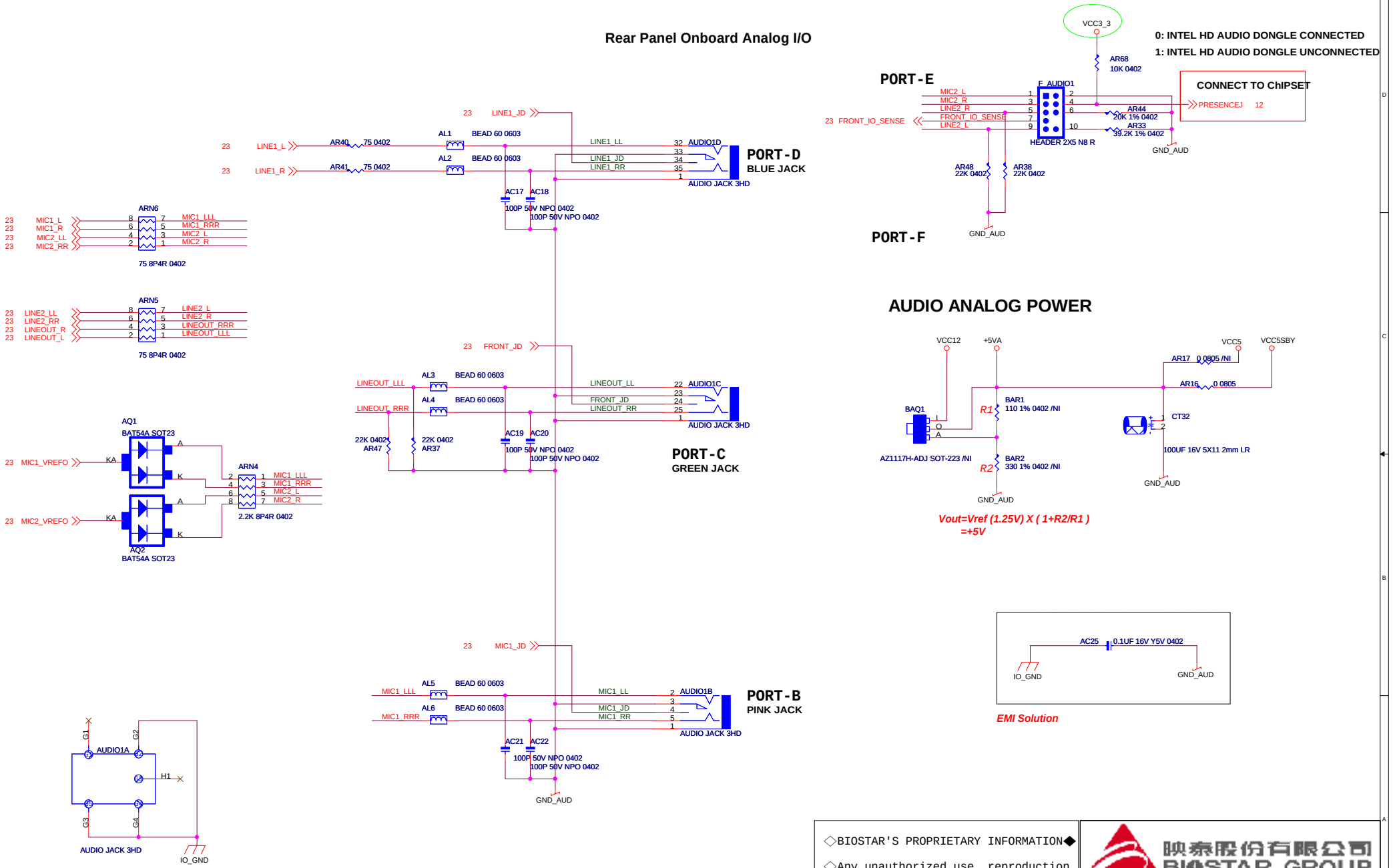

◇BIOSTAR'S PROPRIETARY INFORMATION◆

◇Any unauthorized use, reproduction, duplication, or disclosure of this document will be subject to the applicable civil and/or criminal penalties.◆

映泰股份有限公司 BIOSTAR GROUP

Title: audio connector

Size: Custom | Document Number: IG31M-M7S | Rev: 7.1

Date: Wednesday, September 16, 2009 | Sheet 24 of 32

PDF created with pdfFactory Pro trial version www.pdffactory.com

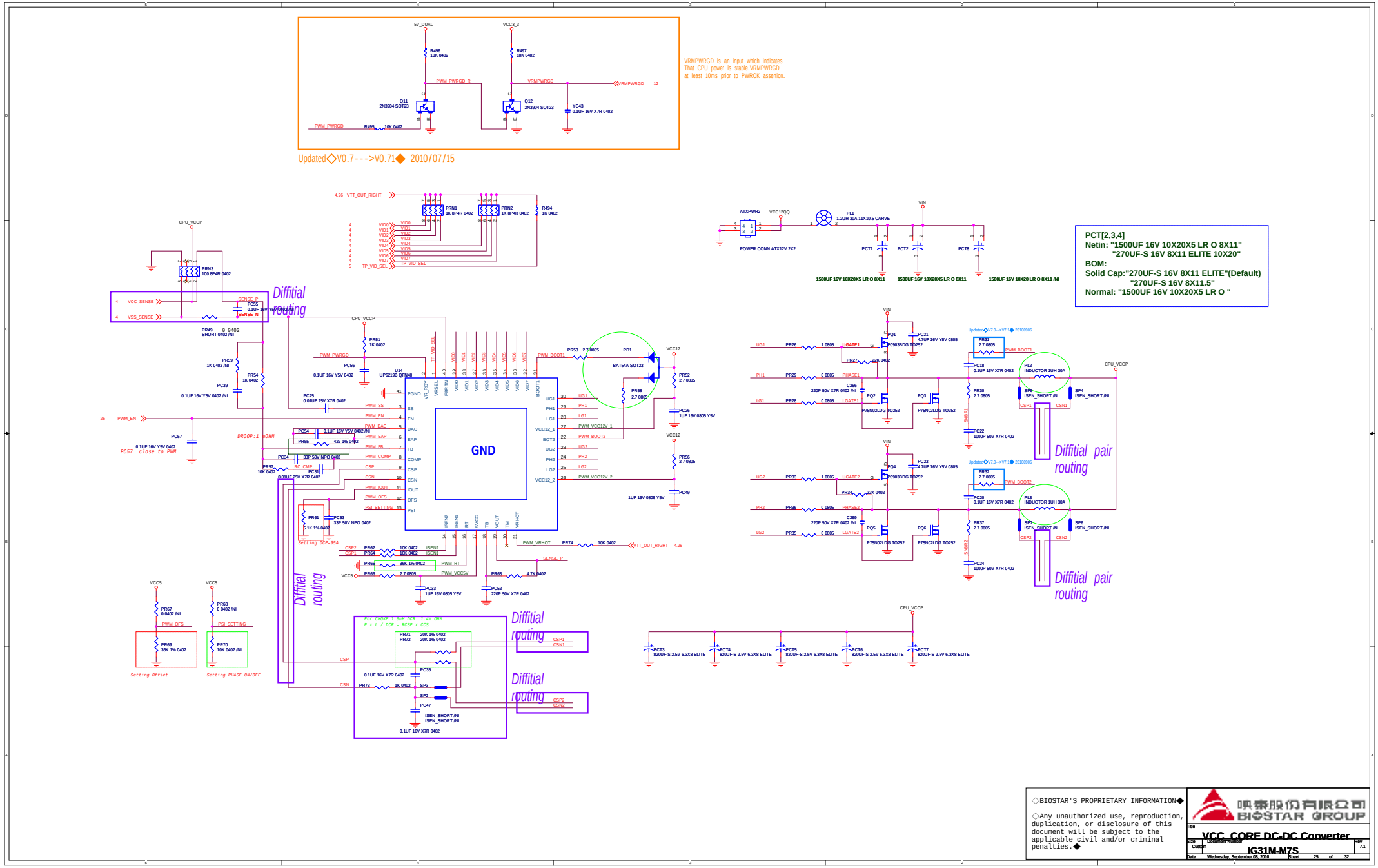

PDF created with pdfFactory Pro trial version www.pdffactory.com

+3V3_DUAL

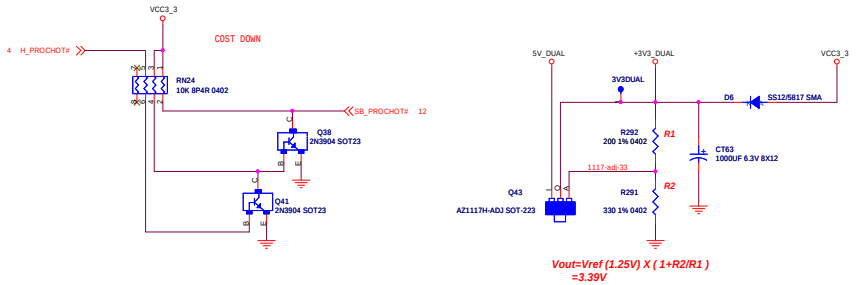

1D05V For SB

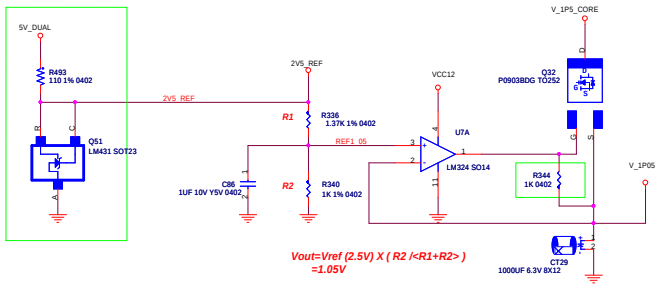

PWM Sequence

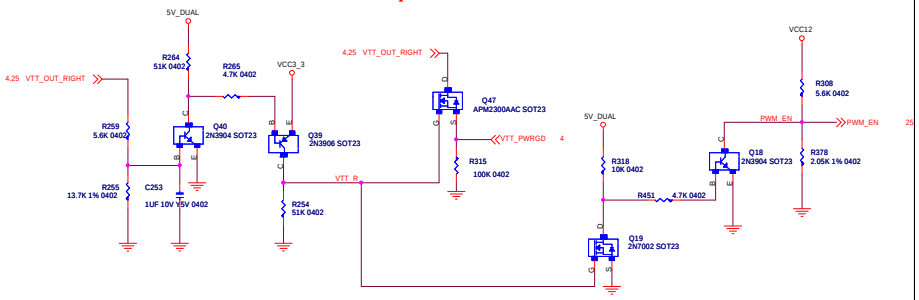

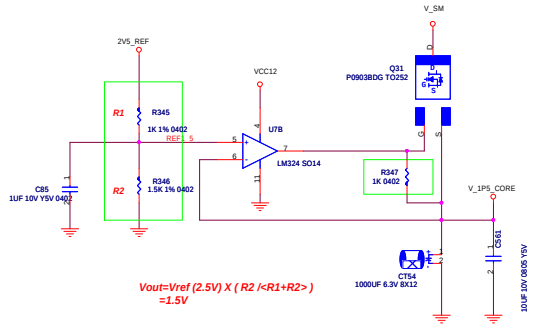

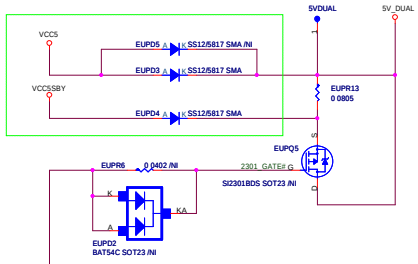

Energy-Using Product(EUP)

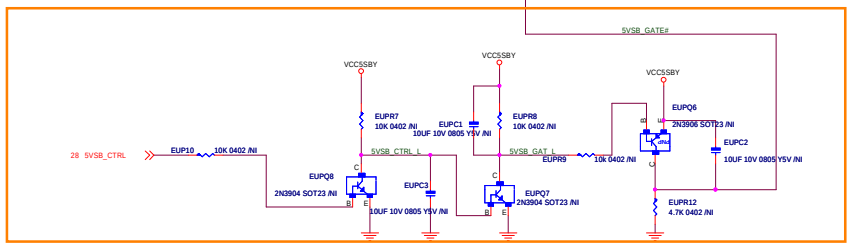

5VSB_CTRL LOW(S5): +5V_DUAL=0V
5VSB_CTRL HIGH/ATX_PWRGD LOW: +5V_DUAL FORM +5V_STBY
5VSB_CTRL HIGH/ATX_PWRGD HIGH: +5V_DUAL FORM VCC5

1D5V For VCCD_CRT

◇BIOSTAR'S PROPRIETARY INFORMATION◆

◇Any unauthorized use, reproduction, duplication, or disclosure of this document will be subject to the applicable civil and/or criminal penalties.◆

映泰股份有限公司 BIOSTAR GROUP

Title: Miscellaneous DC-DC Converters

Size: Custom | Document Number: IG31M-M7S | Rev: 7.1

Date: Wednesday, September 08, 2010 | Sheet 26 of 32

PDF created with pdfFactory Pro trial version www.pdffactory.com

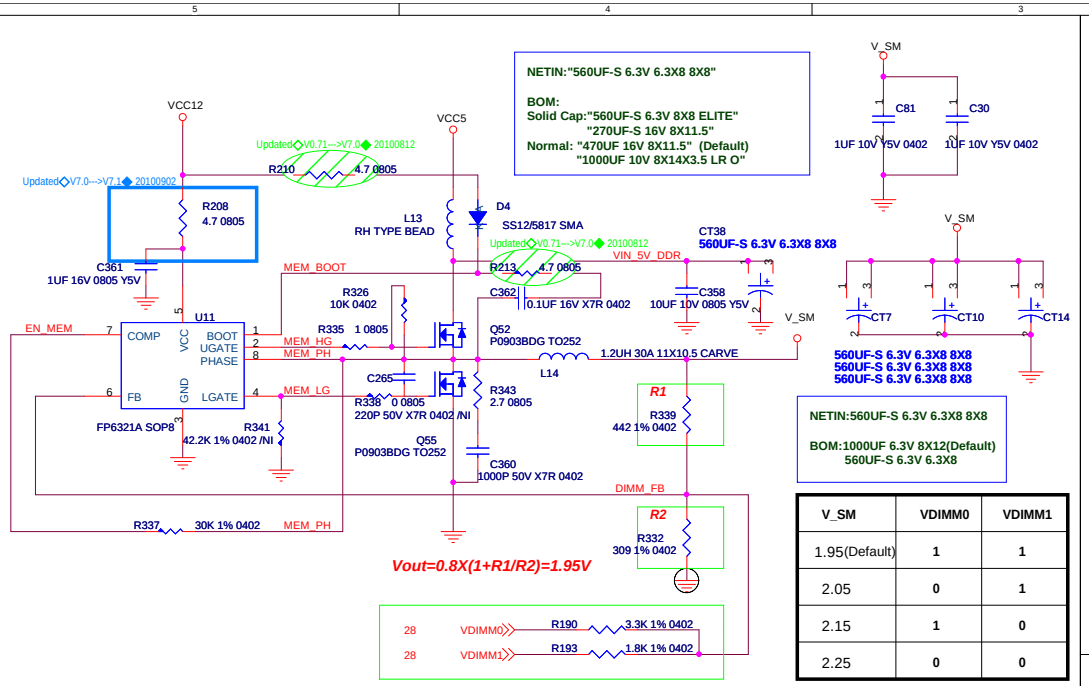

V_SM	VDIMM0	VDIMM1
1.95(Default)	1	1
2.05	0	1
2.15	1	0
2.25	0	0

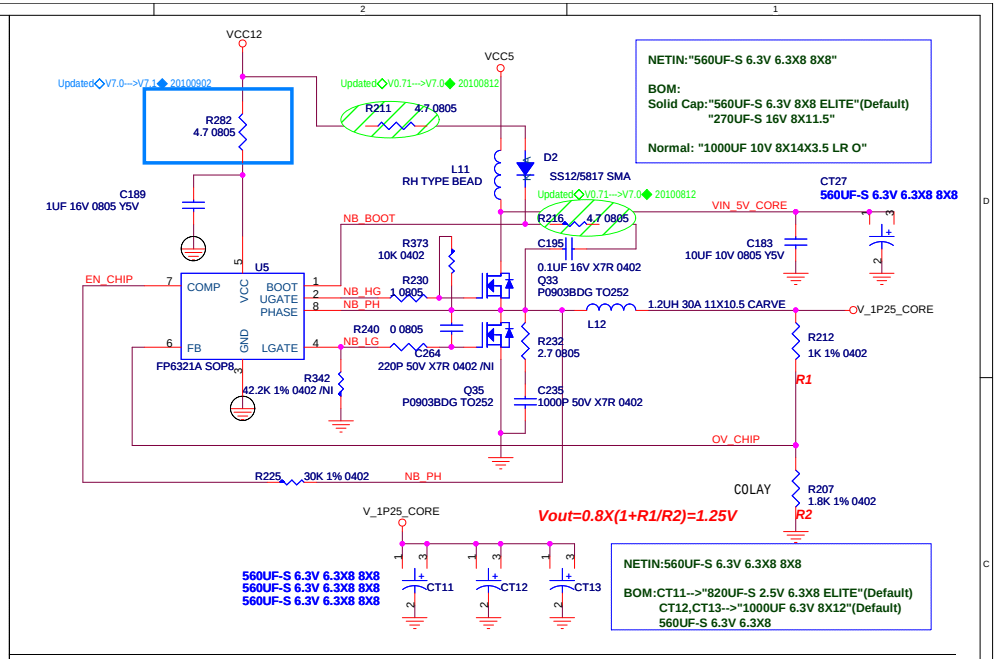

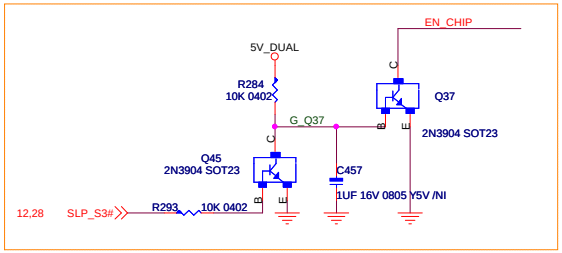

Updated◇V0.7--->V0.71◆ 20100707

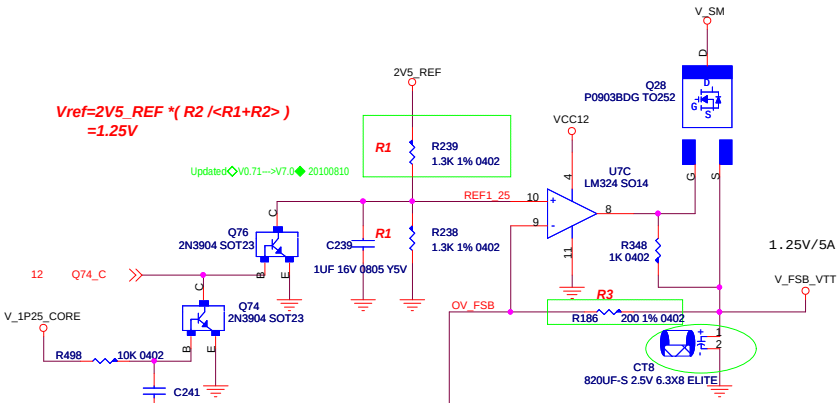

V_FSB_VTT	VFSB0	VFSB1
1.25 (Default)	1	1
1.3	0	1
1.35	1	0
1.4	0	0

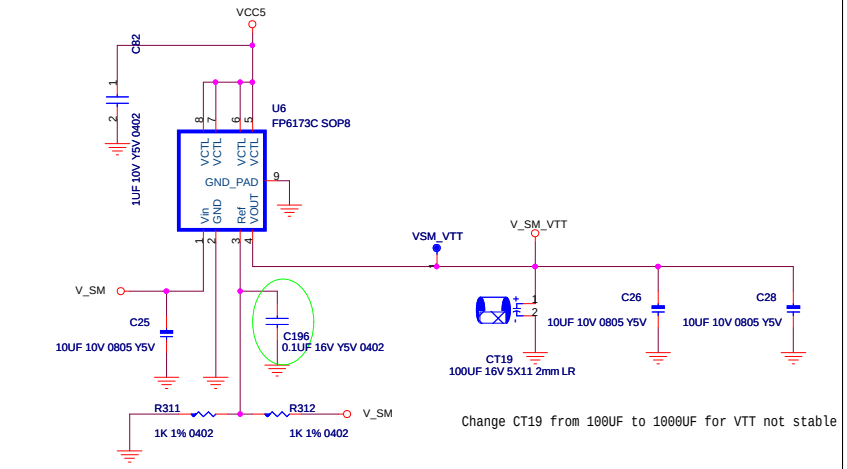

Change CT19 from 100UF to 1000UF for VTT not stable

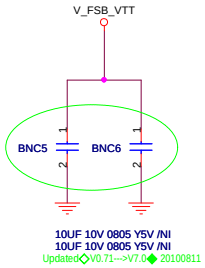

◇BIOSTAR'S PROPRIETARY INFORMATION◆

◇Any unauthorized use, reproduction, duplication, or disclosure of this document will be subject to the applicable civil and/or criminal penalties.◆

映泰股份有限公司 BIOSTAR GROUP

Title: V_SM & V_1P25_CORE

Size: Custom | Document Number: IG31M-M7S | Rev: 7.1

Date: Wednesday, September 08, 2010 | Sheet 27 of 32

PDF created with pdfFactory Pro trial version www.pdffactory.com

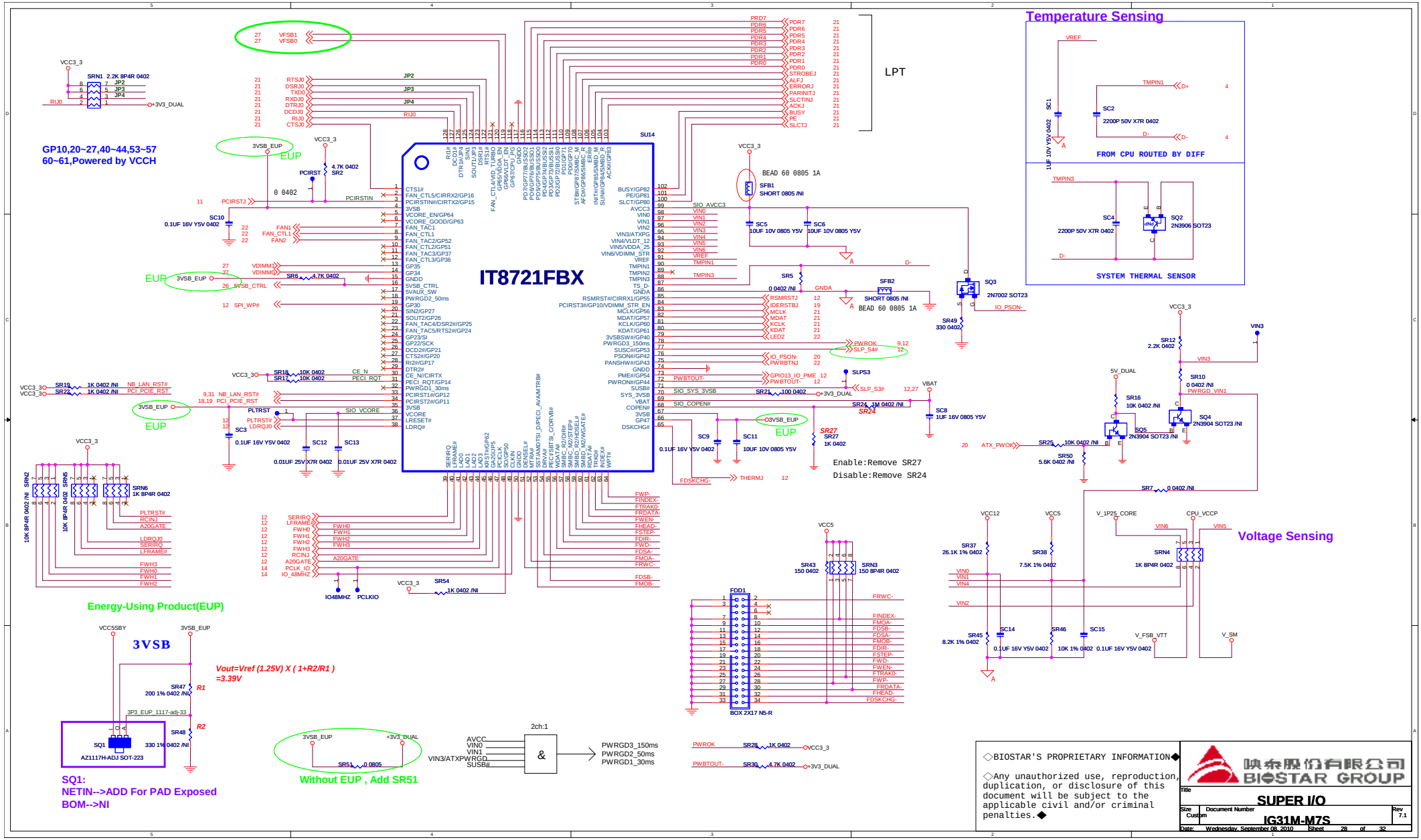

◇BIOSTAR'S PROPRIETARY INFORMATION◆

◇Any unauthorized use, reproduction, duplication, or disclosure of this document will be subject to the applicable civil and/or criminal penalties.◆

PDF created with pdfFactory Pro trial version www.pdffactory.com

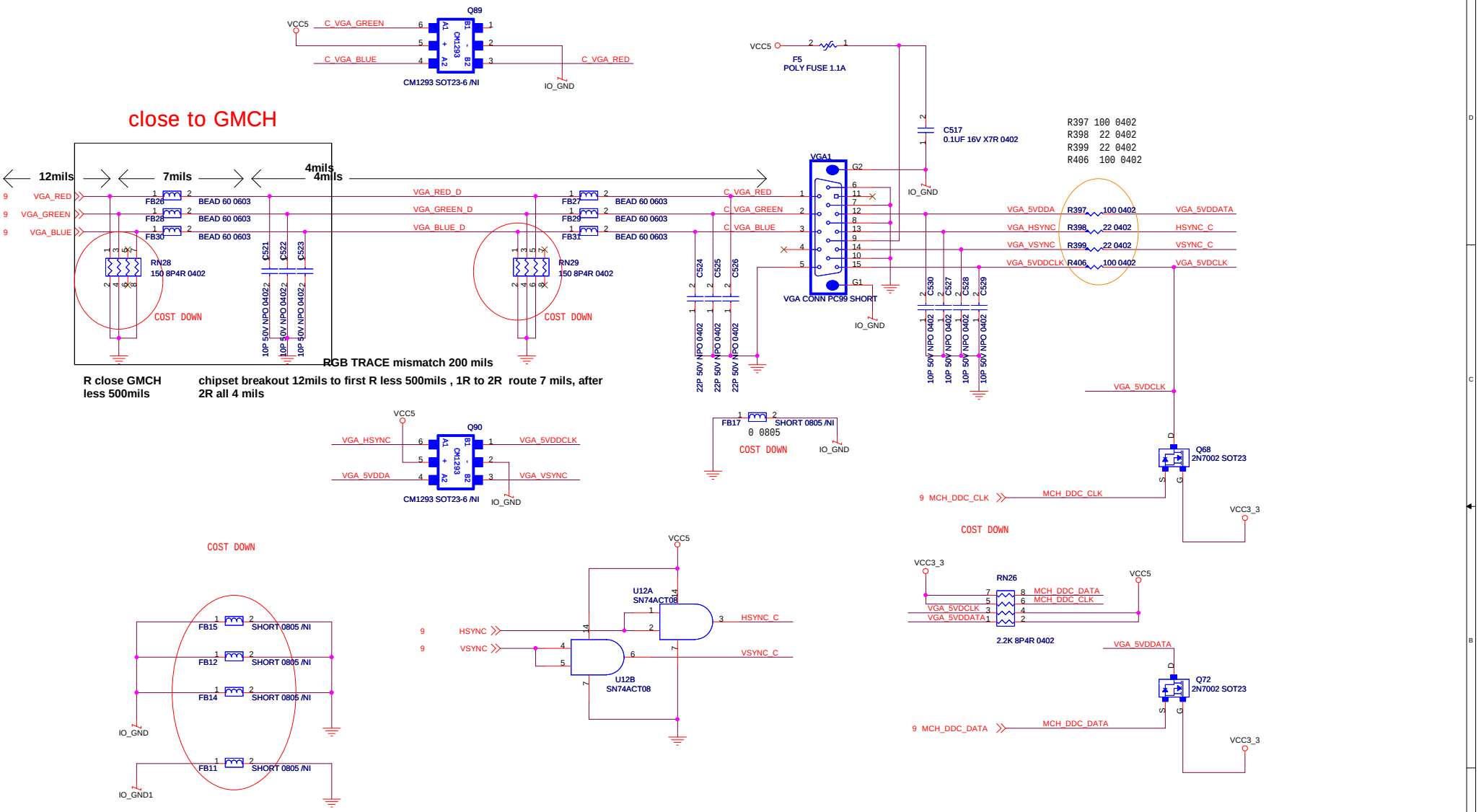

◇BIOSTAR'S PROPRIETARY INFORMATION◆

◇Any unauthorized use, reproduction, duplication, or disclosure of this document will be subject to the applicable civil and/or criminal penalties.◆

映泰股份有限公司
BIOSTAR GROUP

Title: VGA CRT CONNECTOR

Size	Document Number	Rev
Custom	IG31M-M7S	7.1

Date: Wednesday, September 08, 2010 Sheet 29 of 32

PDF created with pdfFactory Pro trial version www.pdffactory.com

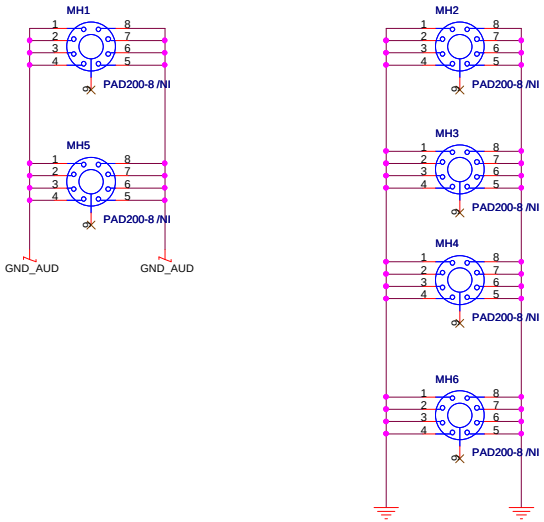

Impedance Testing Coupon

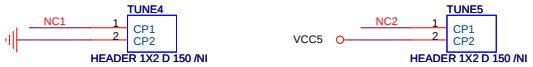

◇BIOSTAR'S PROPRIETARY INFORMATION◆

◇Any unauthorized use, reproduction, duplication, or disclosure of this document will be subject to the applicable civil and/or criminal penalties.◆

映泰股份有限公司
BIOSTAR GROUP

Title	MH & Coupon	
Size: Custom	Document Number: IG31M-M7S	Rev: 7.1
Date: Friday, September 03, 2010	Sheet 30 of 32	

PDF created with pdfFactory Pro trial version www.pdffactory.com

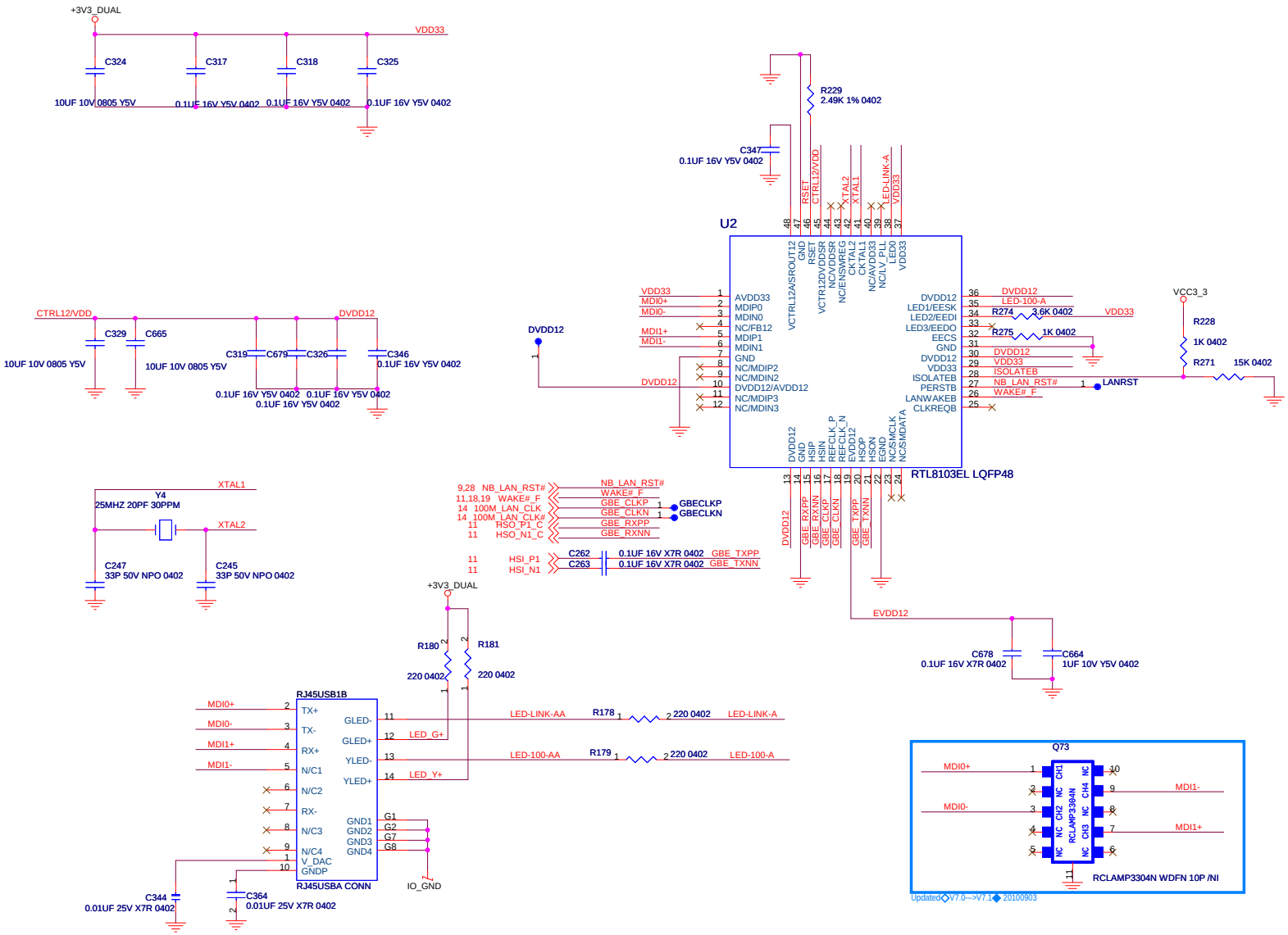

◇BIOSTAR'S PROPRIETARY INFORMATION◆

◇Any unauthorized use, reproduction, duplication, or disclosure of this document will be subject to the applicable civil and/or criminal penalties.◆

映泰股份有限公司 BIOSTAR GROUP

Title: REALTEK 8102EL LAN

Size: Custom | Document Number: IG31M-M7S | Rev: 7.1

Date: Wednesday, September 08, 2010 | Sheet 31 of 32

PDF created with pdfFactory Pro trial version www.pdffactory.com

(BAT1)
電池
3V BATTERY SONY

JCMOS1(1_2)
JUMPER 2P B

(Y3)
X'TAL WIRE

(U8)
FLASH ROM
SPI MX25L4005 DIP

PCB
PCB
IG31M-M7S VER:7.1

15-N30-171000R11 ... IG31M-M7S VER:7.1/OSP/BLACK/(169.99*224.97*1.5)mm/4L/TREND
86-IG31MM7S-R02P-71
96-IG31MM7S-R02P-71

(PCB)
PCB POLON
POLON 235X182

(NB1)
NB HEATSINK
NBHS-G31G

(ICH1)
SB HEATSINK
BNP SMALL-L

◇BIOSTAR'S PROPRIETARY INFORMATION◆

◇Any unauthorized use, reproduction, duplication, or disclosure of this document will be subject to the applicable civil and/or criminal penalties.◆

映泰股份有限公司
BIOSTAR GROUP

Title	BOM	
Size: Custom	Document Number: IG31M-M7S	Rev: 7.1
Date: Wednesday, September 08, 2010	Sheet 32 of 32	

PDF created with pdfFactory Pro trial version www.pdffactory.com